SP100 Series
Solar Pump Inverter
User Manual

SHENZHEN INVT ELECTRIC CO., LTD.

Preface

Overview

Thank you for purchasing INVT SP100 series solar pump inverter. If not otherwise specified, the inverter mentioned in this manual refers to SP100 series solar pump inverter).

This manual mainly describes the methods of mechanical installation, electrical installation, operation methods, commissioning, maintenance and troubleshooting of the SP100 series inverter. Read the manual carefully before installing and using the inverter.

Readers

Personnel with electrical professional knowledge (such as qualified electrical engineers or personnel with equivalent knowledge).

Change history

Due to product version upgrade or other reasons, this document will be updated from time to time without notice.

No.	Change description	Version	Release date
1	First release.	V1.0	March 2024
2	• Updated product models and data in sections 2.1 – 2.5. • Updated external interface diagram in section 4.3.2 Main circuit terminals. • Added notes in chapter 6 and section 6.11.2. • Updated product models and selection data in Appendix D Peripheral accessories. • Added section D.3 IoT module. • Updated the dimension diagram in section D.4.3. • Added section D.4.4 for solar panel model selection. • Added Table D-1 for model selection of fuse, circuit breaker, and contactor. • Added capacitor setting method for DC models. • Other minor corrections.	V1.1	January 2025
3	• Updated section 4.3.2 Main circuit terminals, and added Table 4-1 COM port aviation connector wiring	V1.2	November 2025

No.	Change description	Version	Release date
	sequence description. ● Updated section 4.4.2 Control circuit terminals. ● Updated section D.4.1 to Harmonic filter, and added Table D-3 Output filter selection. ● Updated section D.4.2 to EMC filter. ● Updated section D.4.4 Solar panel. ● Updated function code parameters P15.06, P15.07, and P15.32.		

Contents

1 Safety precautions 1
1.1 Safety declaration 1
1.2 Safety level definition 1
1.3 Personnel requirements 1
1.4 Safety guidelines 2
2 Product overview 5
2.1 Product nameplate and model 5
2.2 Product specifications 5
2.3 Product ratings 7
2.4 Product dimensions and weight 8
2.5 Product heat dissipation 9
2.6 Structure diagram 11
2.7 System configuration 12
2.8 Quick startup 13
3 Mechanical installation 14
3.1 Unpacking inspection 14
3.2 Preparing 14
3.2.1 Installation environment and site 15
3.2.2 Installation direction 15
3.2.3 Installation space 16
3.3 Mounting method 17
4 Electrical installation 18
4.1 Insulation inspection 18
4.2 Cable selection and routing 18
4.2.1 Cable selection 18
4.2.2 Cable arrangement 19
4.3 Main circuit wiring 19
4.3.1 Main circuit wiring diagrams 19
4.3.2 Main circuit terminals 20
4.4 Control circuit wiring 26
4.4.1 Control circuit wiring diagram 26
4.4.2 Control circuit terminals 26
4.4.3 Input signal connection diagram 27
4.5 Power distribution protection 27
5 Keypad operation guidelines 29
5.1 Keypad panel display 29
5.1.1 Indicator 29

5.1.2 Display screen 29
5.1.3 Key 30
5.2 Operation procedure 30
5.2.1 Editing shortcut function code groups 30
5.2.2 Viewing and editing detailed function code groups 31
5.2.3 Viewing status parameters on homepage 32
5.2.4 Motor parameter autotuning 32
6 Commissioning 34
6.1 Motor parameter setting 35
6.1.1 Motor type selection 35
6.1.2 Rated motor parameter setting 35
6.2 Parameter autotuning setting 36
6.2.1 Motor parameter autotuning 36
6.3 Running commands 37
6.4 Frequency setting 38
6.4.1 Frequency setting method 38
6.5 Speed control mode selection 39
6.6 Stop settings 40
6.6.1 Stop settings 40
6.7 Control performance regulation 40
6.7.1 Space vector control performance optimization 40
6.8 Input and output 45
6.8.1 Digital input and output 45
6.9 RS485 communication 50
6.10 Monitoring parameters 53
Group P07—Human-machine interface (HMI) 53
Group P17—Status viewing 59
6.11 Protection parameter setting 60
6.11.1 Current-limit protection 60
6.11.2 Frequency decrease at sudden power failure 61
6.12 Specialized function commissioning 62
6.12.1 Weak-light protection function 62
6.12.2 Full-water and empty-water protection function 63
6.12.3 Dry pumping prevention function 65
6.12.4 Automatic switching 66
6.12.5 Hybrid power supply function 68
6.12.6 Flow calculation function 69
6.12.7 Timing start/stop function 71
6.12.8 Single-phase motor function 71
7 Communication 74

7.1 Standard communication interface 74
7.2 Communication data address 74
7.2.1 Function parameter address 74
7.2.2 Non-function parameter address 75
7.3 Modbus networking 78
7.3.1 Network topology 78
7.3.2 RTU mode 79
7.3.3 RTU command code 82
7.3.4 Fieldbus scale 86
7.3.5 Error message response 86
7.3.6 Communication commissioning 87
8 Fault handling 89
8.1 Fault indication and reset 89
8.2 Faults and solutions 89
8.2.1 Common faults and solutions 90
8.2.2 Other status 94
8.3 Analysis on common faults 95
8.3.1 Weak-light pre-alarm 95
8.3.2 Unstable frequency 95
8.3.3 Inverter overheating 96
8.4 Countermeasures on common interference 96
8.4.1 Interference problems of meter switch and sensors 96
8.4.2 Interference on RS485 communication 97
8.4.3 Failure to stop and indicator shimmering due to motor cable coupling 98
8.4.4 Leakage current and interference on RCD 99
8.4.5 Live device chassis 100
9 Inspection and maintenance 101
9.1 Daily inspection and regular maintenance 101
9.2 Replacement of wearing parts 102
9.2.1 Cooling fan 102
9.2.2 Electrolytic capacitor 104
9.3 Reforming 104
Appendix A Derating 106
A.1 Derating due to temperature 106
A.2 Derating due to altitude 106
Appendix B Application standards 107
B.1 List of application standards 107
B.2 EMC compliance declaration 107
B.3 EMC product standard 107
Appendix C Dimension drawings 109

Appendix D Peripheral accessories 110
D.1 Cable 110
D.1.1 Power cable 110
D.1.2 Control cable 112
D.2 Breaker and electromagnetic contactor 112
D.3 IoT module 113
D.3.1 Product overview 113
D.3.2 Downloading the monitoring platform 113
D.3.3 Installing data transmission terminal 113
D.3.4 Instructions of data transmission terminal status 114
D.3.5 Fault indication and solutions 115
D.4 Optional parts 116
D.4.1 Harmonic filter 116
D.4.2 EMC filter 118
D.4.3 Anti-thief plate 119
D.4.4 Solar panel 123
Appendix E Function parameter list 124
Group P00—Basic functions 124
Group P01—Start and stop control 127
Group P02—Parameters of motor 1 128
Group P03—Vector control of motor 1 129
Group P04—V/F control 131
Group P05—Input terminals 133
Group P06—Output terminals 134
Group P07—Human-machine interface 135
Group P08—Enhanced functions 141
Group P11—Protection parameters 142
Group P13—SM control 143
Group P14—Serial communication 145
Group P15—Functions special for solar pump 149
Group P16—Solar pump commissioning functions 157
Group P17—Status viewing 158
Group P18—Status viewing functions special for solar pump 160
Group P19—Boost dedicated group 161

1 Safety precautions

1.1 Safety declaration

Read this manual carefully and follow all safety precautions before moving, installing, operating and servicing the active power filter. Otherwise, equipment damage or physical injury or death may be caused.

We shall not be liable or responsible for any equipment damage or physical injury or death caused due to failure to follow the safety precautions.

1.2 Safety level definition

To ensure personal safety and avoid property damage, you must pay attention to the warning symbols and tips in the manual.

Warning symbols	Name	Description
	Danger	Severe personal injury or even death can result if related requirements are not followed.
	Electric shock	Severe personal injury or even death can result if related requirements are not followed. As high voltage still presents in the bus capacitor after power off, wait for at least 5 minutes (or 15 minutes, 25 minutes, depending on the warning symbols on the machine) after power off to prevent electric shock.
	Warning	Personal injury or equipment damage can result if related requirements are not followed.
	Electrostatic discharge	The PCBA may be damaged if related requirements are not followed.
	Hot sides	You may get burnt if related requirements are not followed.
Note	Note	Slight personal injury or equipment damage can result if related requirements are not followed.

1.3 Personnel requirements

Trained and qualified professionals: People operating the equipment must have received professional electrical and safety training and obtained the certificates, and must be familiar with all steps and requirements of equipment installing, commissioning, running and maintaining and capable to prevent any emergencies according to experiences.

1.4 Safety guidelines

<table>
<tr><th colspan="2">General principles</th></tr>
<tr><td></td><td>

Only trained and qualified professionals are allowed to carry out related operations.
Do not perform wiring, inspection or component replacement when power supply is applied. Before performing these operations, ensure all the input power supplies have been disconnected, and wait for at least the time designated on the inverter or until the DC bus voltage is less than 36V. The minimum waiting time is listed in the following.
<table>
<tr><th>Model</th><th>Minimum waiting time</th></tr>
<tr><td>220V 0.75–2.2kW 380V 2.2–22kW</td><td>5 minutes</td></tr>
</table>

</td></tr>
<tr><td></td><td>

Do not modify the inverter unless authorized; otherwise fire, electric shock or other injury may result.
The inverter cannot be used as an "Emergency-stop device".
The inverter cannot act as an emergency brake for the motor; it is a must to install a mechanical braking device.
Prevent the screws, cables and other conductive parts from falling into the inverter.

</td></tr>
<tr><td></td><td>

The base may become hot when the inverter is running. Do not touch. Otherwise, you may get burnt.

</td></tr>
<tr><td></td><td>

The electrical parts and components inside the inverter are electrostatic sensitive. Take measurements to prevent electrostatic discharge when performing related operations.

</td></tr>
</table>

<table>
<tr><th colspan="2">Delivery</th></tr>
<tr><td></td><td>

Select appropriate tools for inverter delivery to avoid damage to the inverter, and take protective measures like wearing safety shoes and working uniforms to avoid physical injury or death.
Protect the inverter against physical shock or vibration.
Do not carry the inverter only by its front cover as the cover may fall off.

</td></tr>
</table>

<table>
<tr><th colspan="2">Installation</th></tr>
<tr><td></td><td>

Do not install the inverter on inflammables. In addition, prevent the inverter from contacting or adhering to inflammables.
Do not install the damaged or incomplete inverter.
Do not contact the inverter with damp objects or body parts. Otherwise, electric shock may result.

</td></tr>
</table>

Installation	
	• The installation site must be away from children and other public places (See section 3.2.1 Installation environment and site for details). • As inverter leakage current caused during running may exceed 3.5mA, apply reliable grounding and ensure the ground resistance is less than 10Ω. The PE ground conductor and phase conductor have equal conductivity capability. For the models of 30kW and higher, the cross sectional area of the PE ground conductor can be slightly less than the recommended area. • L1, L2, and L3 are the power input terminals, U, V, and W are the output motor-connection terminals, and PV is the photovoltaic input power terminal. Connect the input power cables and motor cables properly; otherwise, the inverter may be damaged. • When the inverter is installed in a confined space (such as cabinet), it is necessary to provide protective devices (such as fireproof housing, electrical protective housing, mechanical protective housing, etc.) that meet the IP rating, and the IP rating shall comply with the relevant IEC standards and local regulations.

Commissioning	
	• The inverter may start up by itself when the one-click startup command is valid. Do not get close to the inverter and motor.
	• Do not switch on or switch off the input power supplies of the inverter frequently. • If the inverter has been stored without use for a long time, perform capacitor reforming (described in section 9.3 Reforming), inspection and pilot run for the inverter before the reuse.

Run	
	• Close the inverter front cover before running; otherwise, electric shock may occur. • High voltage presents inside the inverter during running. Do not carry out any operation on the inverter during running except for keypad setup. The control terminals of the product form extra-low voltage (ELV) circuits. Therefore, you need to prevent the control terminals from connecting to accessible terminals of other devices. • During driving a synchronous motor, besides above-mentioned items, the following work must be done: ✓All input power supplies have been disconnected, including the main power and control power. ✓The synchronous motor has been stopped, and the voltage on output end

Run	
	of the inverter is lower than 36V. ✓After the synchronous motor has stopped, wait for at least the time designated on the inverter, and ensure the voltage between (+) and (-) is lower than 36V. ✓During operation, it is a must to ensure the synchronous motor cannot run again by the action of external load; it is recommended to install an effective external braking device or cut off the direct electrical connection between the synchronous motor and the inverter.

Maintenance	
	• Do not perform inverter maintenance or component replacement when the power is on. Otherwise, electric shock may result. • Keep the inverter and its parts and components away from combustible materials and ensure they have no combustible materials adhered.
	• During maintenance and component replacement, take proper anti-static measures on the inverter and its internal parts.
	• Do not carry out insulation voltage-endurance test on the inverter, or measure the control circuits of the inverter with a megohmmeter.
Note	• Use proper torque to tighten screws.

Disposal	
	• The inverter contains heavy metals. Dispose of a scrap inverter as industrial waste.

2 Product overview

2.1 Product nameplate and model

Each inverter is affixed with a nameplate containing the basic product information and, depending on the actual certification, certification marks such as the CE mark.

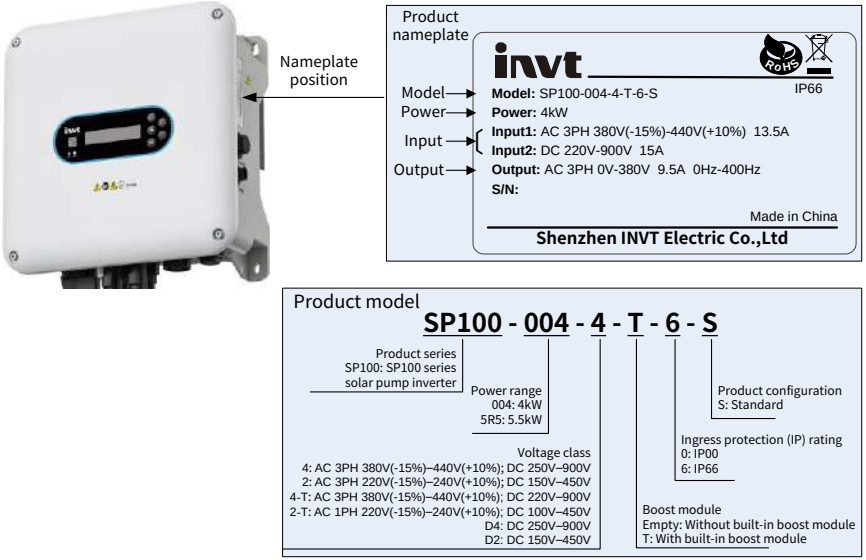

2.2 Product specifications

Item		Specifications	
Input	AC input voltage (V)	4 and 4-T: AC 3PH 380V (-15%) – 440V (+10%); rated voltage: 380V 2 and 2-T: AC 3PH/1PH 220V (-15%) – 240V (+10%); rated voltage: 220V	
	PV input voltage (V)	4: DC 250V–900V	Recommended MPP voltage: 570V
		D4: DC 250V–900V	Recommended MPP voltage: 570V
		2: DC 150V–450V	Recommended MPP voltage: 350V
		D4: DC 150V–450V	Recommended MPP voltage: 350V
		4-T: DC 220V–900V	Recommended MPP voltage: 570V
		2-T: DC 100V–450V	Recommended MPP voltage: 350V
	Input current (A)	See section 2.3 Product ratings.	

Item		Specifications
Input	PV max. input current (A)	See section section 2.3 Product ratings.
	Input frequency (Hz)	2, 4, 2-T, 4-T AC models: 50Hz or 60Hz; Allowed range: 47–63Hz, with a maximum change rate of 20%/s
	Short-circuit capacity	According to IEC 61439‑1, the rated short-time withstand current at the incoming terminals of the switchgear assembly is up to 100 kA. The VFD is suitable for applications where the prospective short-circuit current does not exceed the breaking capacity (for example, 100 kA) of its protective devices, and its rated operational current is significantly lower than this value—typically ≤ 1 kA.
Output	Output voltage (V)	4, D4, 4-T: 0–380V 2, D2, 2-T: 0–220V
	Output current (A)	See section section 2.3 Product ratings.
	Output power (kW)	See section section 2.3 Product ratings.
	Output frequency (Hz)	0–400Hz
Control Performance	Control mode	Space voltage vector control, and sensorless vector control (SVC)
	Motor	Motor type: Asynchronous motor (AM) and synchronous motor (SM) Voltage: 0–U1 (motor rated voltage), 3PH symmetrical, Umax (inverter rated voltage) at the field-weakening point Circuit protection: The motor output short-circuit protection meets the requirements of IEC 61800-5-1. Frequency: 0–400Hz Frequency resolution: 0.01Hz Field-weakening point: 10–400Hz Carrier frequency: 1–15kHz. Please refer to the function code P00.14 for the default carrier frequency. Maximum motor cable length: 200m
	Speed ratio	For AMs: 1: 200 (SVC) For SMs: 1: 20 (SVC)
	Speed control accuracy	±0.2% (SVC)
	Speed fluctuation	±0.3% (SVC)

Item		Specifications
Control Performance	Overload capacity	120% of rated current for 60s, and 150% of rated current for 10s
	Terminal digital input resolution	No more than 2ms
	Digital input	Three regular inputs; max. frequency: 1kHz
	Relay output	One programmable relay output. RO1A: NO; RO1B: NC; RO1C: common Contact capacity: 3A/AC 250V, 1A/DC 30V
Environment requirements and certification	Installation method	Only supports wall mounting
	Temperature of running environment	-10–+60°C **Note:** Derating is required when the ambient temperature exceeds 45°C.
	Ingress protection (IP) rating	IP66
	Pollution level	Level 2
	Cooling method	Natural heat dissipation or forced air cooling

2.3 Product ratings

Product model	Output power (kW)	AC input current (A)	PV max. input current (A)	Output current (A)
4-T: AC 3PH 380(-15%)–440(+10%), DC 220V–900V				
SP100-2R2-4-T-6-S	2.2	5.8	15	5.5
SP100-004-4-T-6-S	4	13.5	15	9.5
2-T: AC 3PH/1PH 220(-15%)–240(+10%), DC 100V–450V				
SP100-0R7-2-T-6-S	0.75	5(3PH)/9.3(1PH)	15	4.2(3PH)/7.2(1PH)
SP100-1R5-2-T-6-S	1.5	7.7(3PH)/15.7(1PH)	15	7.5(3PH)/10.2(1PH)
SP100-2R2-2-T-6-S	2.2	11(3PH)/24(1PH)	15	10(3PH)/14(1PH)
4: AC 3PH 380(-15%)–440(+10%), DC 250V–900V				
SP100-2R2-4-6-S	2.2	5.8	15	5.5
SP100-004-4-6-S	4	13.5	15	9.5
SP100-5R5-4-6-S	5.5	19.5	30	14
SP100-7R5-4-6-S	7.5	25	30	18.5
SP100-011-4-6-S	11	32	30	25
SP100-015-4-6-S	15	40	45	32
SP100-018-4-6-S	18.5	47	45	38
SP100-022-4-6-S	22	51	45	45
2: AC 3PH/1PH 220(-15%) – 240(+10%), DC 150V – 450V				
SP100-2R2-2-6-S	2.2	11(3PH)/24(1PH)	15	10(3PH)/14(1PH)

Product model	Output power (kW)	AC input current (A)	PV max. input current (A)	Output current (A)
D4: DC 250V–900V				
SP100-2R2-D4-6-S	2.2	-	15	5.5
SP100-004-D4-6-S	4	-	15	9.5
SP100-5R5-D4-6-S	5.5	-	30	14
SP100-7R5-D4-6-S	7.5	-	30	18.5
SP100-011-D4-6-S	11	-	30	25
SP100-015-D4-6-S	15	-	45	32
SP100-018-D4-6-S	18.5	-	45	38
SP100-022-D4-6-S	22	-	45	45
D2: DC 150V–450V				
SP100-2R2-D2-6-S	2.2	-	15	10

2.4 Product dimensions and weight

Table2-1 Product frames and models

Frame	Product model (DC)		Product model (DC/AC)		Product model (boost DC/AC)	
	D4	D2	4	2	4-T	2-T
A1	SP100-2R2-D4-6-S	SP100-2R2-D2-6-S	-		-	-
	SP100-004-D4-6-S		-		-	-
A2	SP100-5R5-D4-6-S	-	SP100-2R2-4-6-S	SP100-2R2-2-6-S	-	-
	SP100-7R5-D4-6-S		-	-	-	-
A3	SP100-011-D4-6-S	-	SP100-004-4-6-S	-	SP100-2R2-4-T-6-S	SP100-0R7-2-T-6-S
	SP100-015-D4-6-S	-	SP100-5R5-4-6-S	-	SP100-004-4-T-6-S	SP100-1R5-2-T-6-S
	SP100-018-D4-6-S	-	SP100-7R5-4-6-S	-	-	SP100-2R2-2-T-6-S
A4	SP100-022-D4-6-S	-	SP100-011-4-6-S	-	-	-
	-	-	SP100-015-4-6-S	-	-	-
	-	-	SP100-018-4-6-S	-	-	-
	-	-	SP100-022-4-6-S	-	-	-

Note: The frames A1 and A2 adopt natural heat dissipation, while the frames A3and A4 adopt forced air cooling.

Product model	Product frame	Outline dimensions W× H× D (mm)	Packaging outline dimensions W× H× D (mm)	Standard weight (kg)	Gross weight (kg)
SP100-2R2-D2-6-S	A1	252×247×120	335×300×195	2.5	3.0
SP100-2R2-D4-6-S					
SP100-004-D4-6-S					

Product model	Product frame	Outline dimensions W× H× D (mm)	Packaging outline dimensions W× H× D (mm)	Standard weight (kg)	Gross weight (kg)
SP100-5R5-D4-6-S	A2	270×274×150	390×245×330	3.8	4.9
SP100-7R5-D4-6-S					
SP100-2R2-2-6-S					
SP100-2R2-4-6-S					
SP100-011-D4-6-S	A3	298×372×150	490×400×250	4.5	5.9
SP100-015-D4-6-S				5.4	6.8
SP100-018-D4-6-S				5.6	7.0
SP100-0R7-2-T-6-S				5.0	6.5
SP100-1R5-2-T-6-S					
SP100-2R2-2-T-6-S					
SP100-2R2-4-T-6-S					
SP100-004-4-T-6-S					
SP100-004-4-6-S				4.6	6.1
SP100-5R5-4-6-S				5.0	6.5
SP100-7R5-4-6-S					
SP100-011-4-6-S	A4	481×390×216	620×510×340	10.1	13.3
SP100-015-4-6-S				10.9	14.1
SP100-018-4-6-S					
SP100-022-4-6-S				11.2	14.4
SP100-022-D4-6-S				10.4	13.6

2.5 Product heat dissipation

Product model	Entire machine full load power dissipation (W)	Entire machine standby power dissipation (W)	Heat dissipation (BTU/hr)	Air rate (m^3/h)	Air rate (CFM) (ft^3/min)
4-T: AC 3PH 380(-15%)–440(+10%), DC 220V–900V					
SP100-2R2-4-T-6-S	75	13	256	49.5	29.1
SP100-004-4-T-6-S	124	13	423		
2-T: AC 3PH/1PH 220(-15%)–240(+10%), DC 100V–450V					
SP100-0R7-2-T-6-S	68	13	232	49.5	29.1
SP100-1R5-2-T-6-S	98	13	334		
SP100-2R2-2-T-6-S	114	13	389		
4: AC 3PH 380(-15%)–440(+10%), DC 250V–900V					
SP100-2R2-4-6-S	75	13	256	-	-
SP100-004-4-6-S	124	13	423	49.5	29.1
SP100-5R5-4-6-S	136	13	464		
SP100-7R5-4-6-S	163	13	556		

Product model	Entire machine full load power dissipation (W)	Entire machine standby power dissipation (W)	Heat dissipation (BTU/hr)	Air rate (m^3/h)	Air rate (CFM) (ft^3/min)
SP100-011-4-6-S	222	18	758	163.8	96.4
SP100-015-4-6-S	305	18	1041		
SP100-018-4-6-S	384	18	1311		
SP100-022-4-6-S	442	18	1509		
2: AC 3PH/1PH 220(-15%)–240(+10%), DC 150V–450V					
SP100-2R2-2-6-S	114	13	389	-	-
D4: DC 250V–900V					
SP100-2R2-D4-6-S	44	12	150	-	-
SP100-004-D4-6-S	76	12	260		
SP100-5R5-D4-6-S	97	12	331	-	-
SP100-7R5-D4-6-S	124	12	424		
SP100-011-D4-6-S	149	14	509	49.5	29.1
SP100-015-D4-6-S	203	14	693		
SP100-018-D4-6-S	243	14	830		
SP100-022-D4-6-S	355	18	1212	163.8	96.4
D2: DC 150V–450V					
SP100-2R2-D2-6-S	75	12	256	-	-

2.6 Structure diagram

Figure 2-1 Product component (taking SP100-018-D4-6-S as an example)

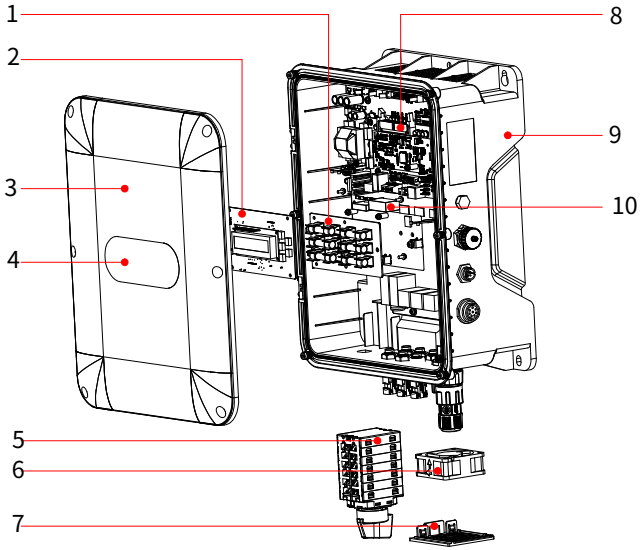

Table2-2 Product component description

No.	Component	Description
1	Fuse board	Used to contain the circuit fuses to protect the solar components.
2	Keypad board	See section 5.2 Operation procedure.
3	Upper cover	Used to protect internal components.
4	Keypad film	See section 5.2 Operation procedure.
5	DC switch	Used to switch on/off solar power supply.
6	Cooling fan	See section 5.2 Operation procedure.
7	Fan cover	See section 5.2 Operation procedure.
8	Control board	-
9	Base shell	Used to protect internal components.
10	Drive board	-

2.7 System configuration

When using the inverter to drive a motor to form a control system, various electrical devices need to be installed on the input and output sides of the inverter to ensure stable system running.

Figure 2-2 System composition

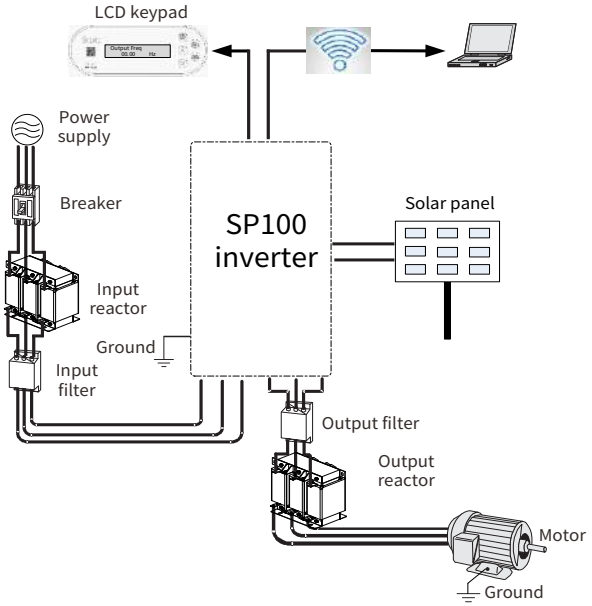

Table2-3 System configuration

Component		Position value	Description
	Breaker	Between the AC power supply and the inverter input side	Device for electric shock prevention and protection against short-to-ground that may cause current leakage and fire. Select residual-current circuit breakers (RCCBs) that are applicable to inverters and can restrict high-order harmonics, and of which the rated sensitive current for one inverter is larger than 30 mA.
	Input reactor	On the inverter AC input side	Accessories used to improve the power factor on the input side of the inverter, and thus restrict high-order harmonic currents.

Component		Position value	Description
	Output reactor	Between the inverter output side and the motor, and installed near the inverter.	(Optional) Accessory used to lengthen the valid transmission distance of the inverter, which effectively restricts the transient high voltage generated during the switch-on and switch-off of the IGBT module of the inverter.
	Input filter	On the inverter input side	(Optional) Input filter: Accessory that restricts the electromagnetic interference generated by the inverter and transmitted to the public grid through the power cable. Try to install the input filter near the input terminal side of the inverter. (Optional) Output filter: Accessory used to restrict interference generated in the wiring area on the output side of the inverter. All 380V inverter models can meet the conductive emission requirements of IEC/EN 61800-3 C3 electrical drive systems. **Note:** For the assembly of motors, motor cables and filters, observe the technical requirements specified in the appendix of the manual.
	Output filter	Try to install the output filter near the output terminal side of the inverter.	
	IoT platform	-	-

For details about optional part model selection, see Appendix D Peripheral accessories.

2.8 Quick startup

Task	Reference
1. Unpacking inspection	See section 3.1 Unpacking inspection.
2. Check that the load and power supply connected to the inverter are proper.	See section 2.1 Product nameplate and model.
3. Check the installation environment.	See section 3.2 Preparing.
4. Install the inverter on the wall/in the cabinet.	See section 3.3 Mounting method.
5. Wiring	See chapter 4 Electrical installation.
6. Commission the inverter.	See chapter 6 Commissioning.

3 Mechanical installation

3.1 Unpacking inspection

After receiving the product, perform the following steps to ensure the product use safety.

- **Check the package**

  Before unpacking, check whether the product package is intact–whether the package is damaged, dampened, soaked, or deformed. After unpacking, check whether the interior surface of the packing box is abnormal, for example, in wet condition.

- **Check the machine and parts**

  After unpacking, check whether the equipment enclosure is damaged or cracked, whether the parts (including the inverter, keypad, and manual) inside the packing box are complete, and whether the nameplate and label on the product body are consistent with the model ordered.

3.2 Preparing

Only trained and qualified professionals are allowed to carry out the operations mentioned in this chapter. Read the following installation preparation carefully before installation to ensure smooth installation and avoid personal injury or equipment damage.

Warning	
	• Carry out operations according to instructions presented in section 1.4 Safety guidelines. Ensure the inverter power has been disconnected before installation. If the inverter has been powered on, disconnect the inverter and wait for at least the time designated on the inverter, and ensure the POWER indicator is off. You are recommended to use a multimeter to check and ensure the inverter DC bus voltage is below 36V. • The inverter installation must be designed and done according to applicable local laws and regulations. INVT does not assume any liability whatsoever for any inverter installation which breaches local laws or regulations.

3.2.1 Installation environment and site

■ **Environment requirements**

Environment	Requirement	
Temperature	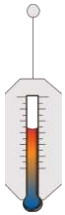	• -10°C–+60°C • Do not use the inverter when the ambient temperature exceeds 60°C. When the ambient temperature exceeds 45°C, derate 1% for every increase of 1°C. • The temperature does not change rapidly. • When the inverter is installed in a closed space, such as control cabinet, use a cooling fan or air conditioner for temperature adjustment if necessary. • When the temperature is too low, if you want to use the inverter that has been idled for a long time, install an external heating device before the use to eliminate the freeze inside the inverter. Otherwise, the inverter may be damaged.
Altitude		• Lower than 1000 meters • When the altitude exceeds 1000m, derate by 1% for every increase of 100m. • When the altitude exceeds 3000m, consult our local dealer or office for details.
Vibration	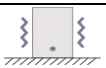	Max. vibration ACC: 5.8m/s^2 (0.6g)

■ **Site requirement**

Site	Requirement	
Indoor or outdoor		Without electromagnetic radiation sources **Note:** The inverter must be installed in a well-ventilated environment based on the housing IP rating.
		Without foreign objects such as oil mist, metal powder, and conductive dust
		Without radioactive, corrosive, hazard, and combustible and explosive substances **Note:** Do not install the inverter onto combustible objects.

3.2.2 Installation direction

The inverter can be installed on the wall or in a cabinet. Vertical installation is a must. Do not install the inverter in other directions such as horizontal, transverse or upside-down.

Figure 3-1 Mounting direction

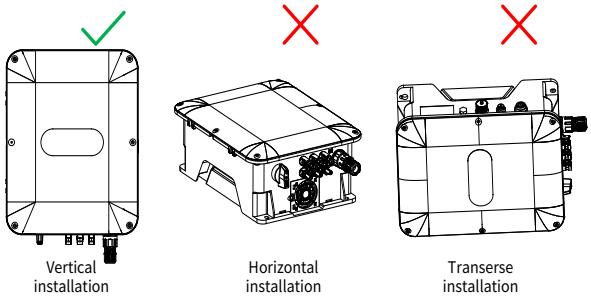

3.2.3 Installation space

Figure 3-2 Installation space diagram of single inverter

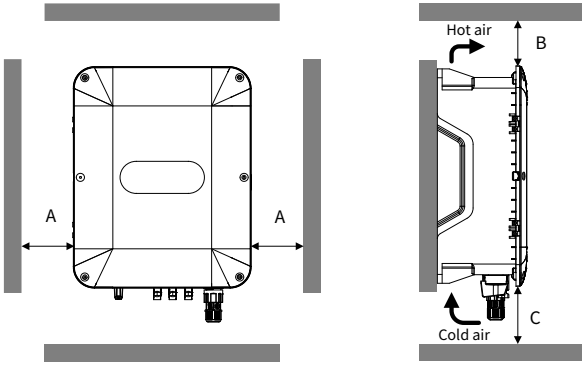

Table3-1 Installation space dimensions of single inverter

Product frame	Dimensions (mm)		
	A	B	C
A1	≥100	≥100	≥150
A2	≥100	≥100	≥150
A3	≥100	≥100	≥150
A4	⩾100	⩾100	⩾150

3.3 Mounting method

SP100 series inverter only supports wall mounting, and the procedures of wall mounting are as follows.

Step 1 Mark the installation hole positions. For details about the installation hole positions, see section Appendix C Dimension drawings. 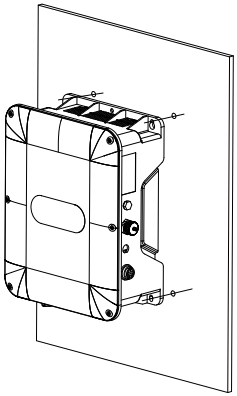	Step 2 Mount the screws or bolts onto the designated positions. 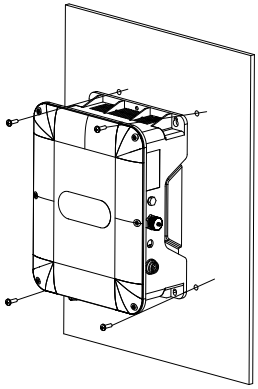
Step 3 Fix the inverter on the wall or mounting plate. 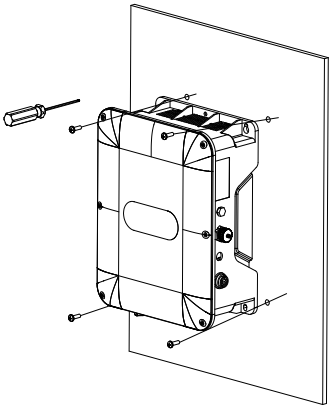	Step 4 Tighten the screws on the wall or mounting plate. 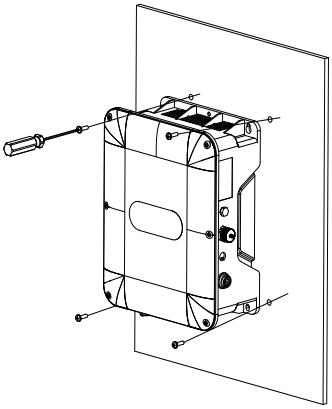

4 Electrical installation

4.1 Insulation inspection

Do not perform any voltage endurance or insulation resistance tests, such as high-voltage insulation tests or using a megameter to measure the insulation resistance, on the inverter or its components. Insulation and voltage endurance tests have been performed between the main circuit and chassis of each inverter before delivery. In addition, voltage limiting circuits that can automatically cut off the test voltage are configured inside the inverters. If you need to perform insulation resistance test on the inverter, please contact us.

Note: Remove the cable connection terminals from the inverter, then perform the insulation resistance test on the input and output power cables.

- **Input power cable**

  Check the insulation conditions of the input power cable of an inverter according to the local regulations before connecting it.

- **Motor cable**

  Ensure that the motor cable is connected to the motor, and then remove the motor cable from the U, V, and W output terminals of the inverter. Use a megohmmeter of 500VDC to measure the insulation resistance between each phase conductor and the protection grounding conductor. For details about the insulation resistance of the motor, see the description provided by the manufacturer.

  Note: The insulation resistance is reduced if it is damp inside the motor. If it may be damp, you need to dry the motor and then measure the insulation resistance again.

4.2 Cable selection and routing

4.2.1 Cable selection

- **Power cable**

  Power cables mainly include input power cables and motor cables. To meet the EMC requirements stipulated in the CE standards, it is recommended to use symmetrical shielded cables as motor cables and input power cables. For details, see section D.1.1 Power cable.

  Note: If the electrical conductivity of the motor cable shield layer does not meet the requirements, a separate PE conductor must be used.

■ **Control cable**

Control cables mainly include analog signal control cables and digital signal control cables. Analog signal control cables use twisted double shielded cables with a separate shielded twisted pair for each signal and different ground wires for different analog signals. For digital signal control cables, a double-shielded cable is preferred, but single-shielded or unshielded twisted pairs can also be used. For details, see section D.1.2 Control cable.

4.2.2 Cable arrangement

Motor cables must be arranged away from other cables. The dU/dt of the inverter output may increase electromagnetic interference on other cables. The motor cables of several inverters can be arranged in parallel. It is recommended that you arrange the motor cables, input power cables, and control cables separately in different trays.

If a control cable and power cable must cross each other, ensure that the angle between them is 90°. The cable trays must be connected properly and well grounded. The cable trays must be connected properly and well grounded. Cable routing and routing distance are shown in Figure 4-1.

Figure 4-1 Cable routing distance

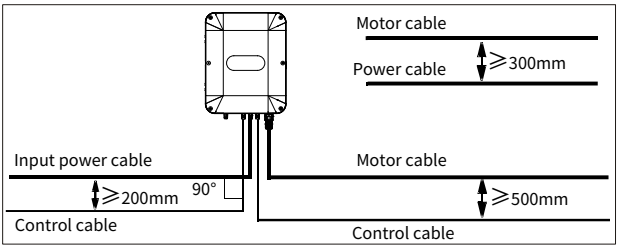

4.3 Main circuit wiring

4.3.1 Main circuit wiring diagrams

Figure 4-2 Main circuit wiring diagram

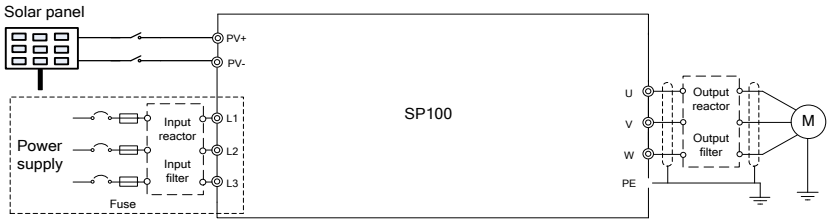

Note:

- The dashed box shows the AC interfaces, which is only available on models that support AC input.
- The fuse, input reactor, input filter, output reactor, and output filter are optional parts. For details, see Appendix D Peripheral accessories.

4.3.2 Main circuit terminals

Product model	External interface	Terminal dimensions
SP100-2R2-D4-6-S	Figure 4-3 External interface 1	Figure a in Table 4-2
SP100-004-D4-6-S		
SP100-2R2-D2-6-S		
SP100-5R5-D4-6-S	Figure 4-4 External interface 2	Figure a in Table 4-2
SP100-7R5-D4-6-S		
SP100-011-D4-6-S	Figure 4-5 External interface 3	Figure b in Table 4-2
SP100-015-D4-6-S		
SP100-018-D4-6-S		
SP100-2R2-4-T-6-S	Figure 4-6 External interface 4	Figure c in Table 4-2
SP100-004-4-T-6-S		
SP100-0R7-2-T-6-S		
SP100-1R5-2-T-6-S		
SP100-2R2-2-T-6-S		
SP100-004-4-6-S		
SP100-2R2-2-6-S	Figure 4-9 External interface 7	Figure c in Table 4-2
SP100-2R2-4-6-S		
SP100-5R5-4-6-S	Figure 4-7 External interface 5	Figure c in Table 4-2
SP100-7R5-4-6-S		
SP100-011-4-6-S	Figure 4-8 External interface 6	Figure d in Table 4-2
SP100-015-4-6-S		
SP100-018-4-6-S		
SP100-022-4-6-S		
SP100-022-D4-6-S		

Figure 4-3 External interface 1

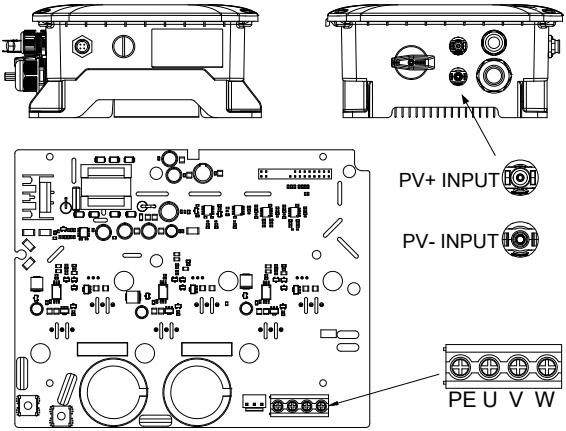

Figure 4-4 External interface 2

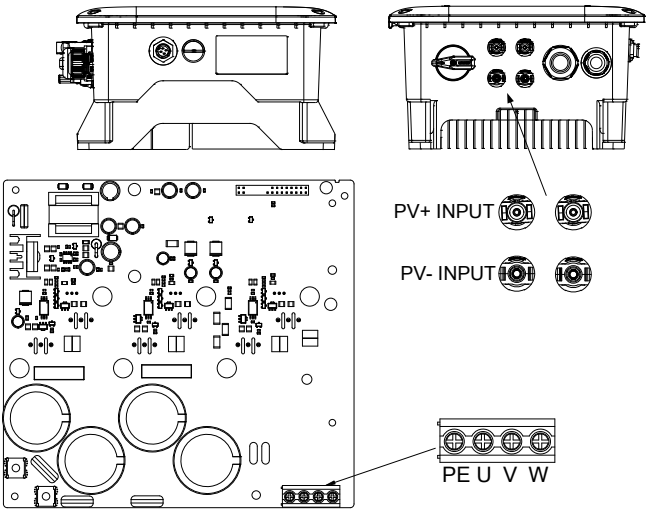

Figure 4-5 External interface 3

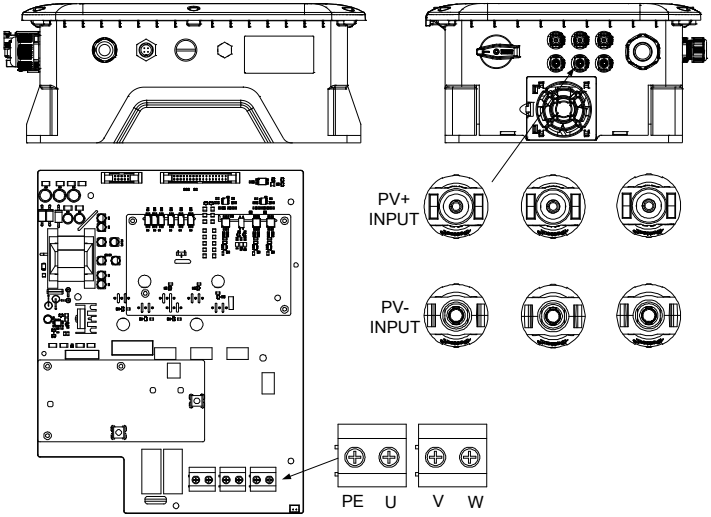

Figure 4-6 External interface 4

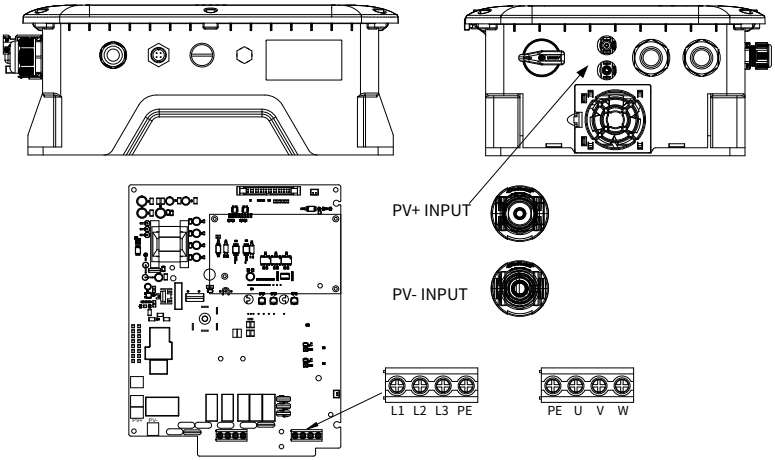

Figure 4-7 External interface 5

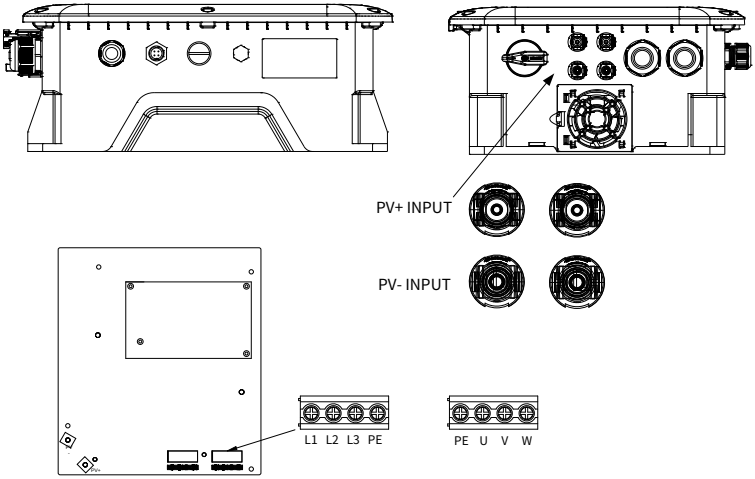

Figure 4-8 External interface 6

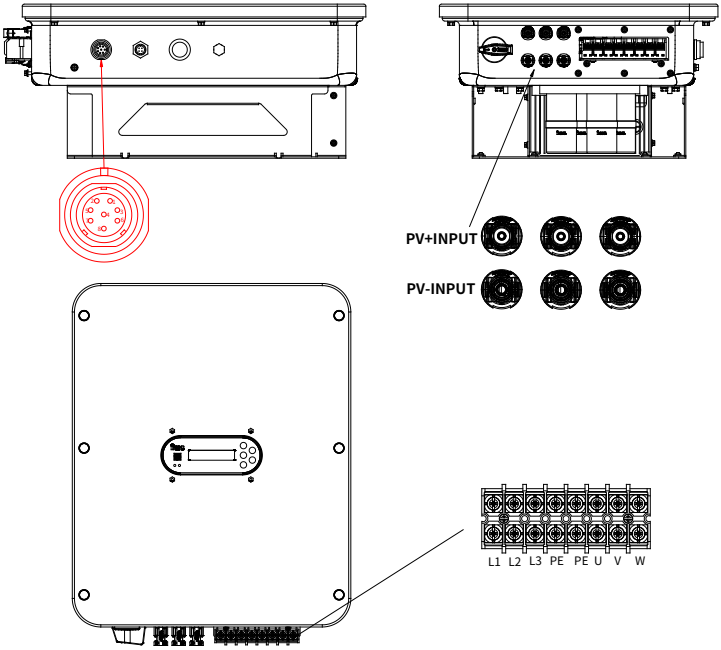

Table 4-1 COM port aviation connector wiring sequence description

PIN	Color	Definition
1	Brown	485+
2	Blue	485-
3	Ash	DI2
4	White	DI3
5	Black	COM/GND
6	-	-
7	Black	COM/GND
8	Black	PE

Figure 4-9 External interface 7

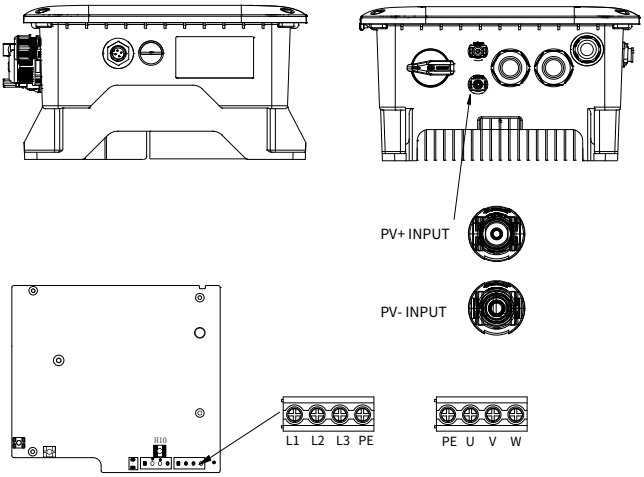

Table 4-2 Terminal dimensions

Figure a	Figure b
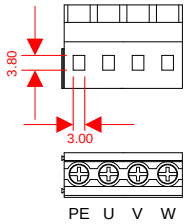	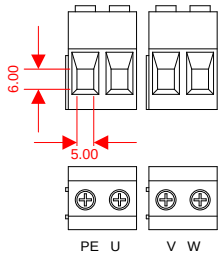
Figure c	**Figure d**
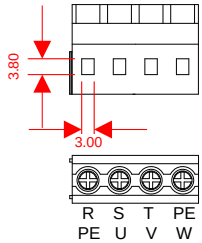	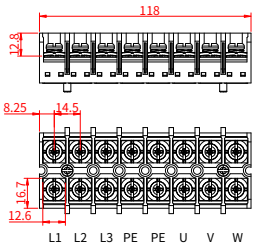

Table 4-3 Drive board main circuit terminal description

Terminal symbol	Terminal name		Function description
	DC model (-D)	AC model	
L1, L2, L3	Not available	Main circuit power input	AC input terminals, connected to the grid.
U, V, W	Inverter outputs		AC output terminals, connected to the motor usually
PV+	Positive terminal of PV input power supply		Terminals of PV input power supply, connected to PV modules usually
PV-	Negative terminal of PV input power supply		
PE	Grounding terminal for safe protection		Grounding terminal for safe protection; each machine must carry two PE terminals and proper grounding is required

Note:

- It is not recommended to use asymmetrical motor cables. If there is a symmetrical

grounding conductor in the motor cable besides the conductive shielded layer, ground the grounding conductor on the inverter end and motor end.

- "Not available" means that the terminal is not for external connection.

4.4 Control circuit wiring

4.4.1 Control circuit wiring diagram

Figure 4-10 Control circuit wiring

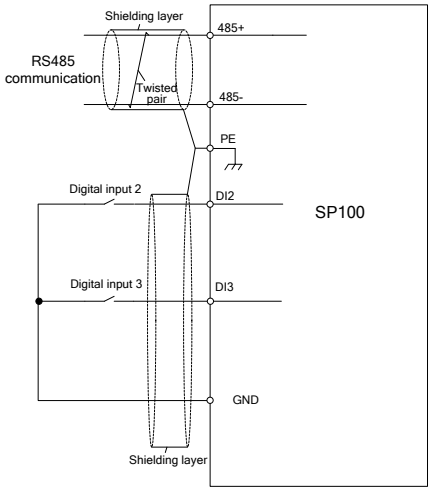

4.4.2 Control circuit terminals

Figure 4-11 Control circuit terminals

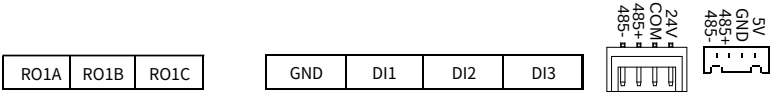

Terminal name	Description
RO1A	Relay output. RO1A: NO; RO1B: NC; RO1C: common Contact capacity: 3A/AC250V, 1A/DC30V
RO1B	
RO1C	
DI1	Digital input terminals. The terminals support switch signal only. Max. input frequency: 1kHz Programmable digital input terminals, the functions of which can be set through the related parameters
DI2	
DI3	

Terminal name	Description
GND	Common point of digital signals DI1–DI3, digital power ground
24V	24V power supply
COM	24V reference ground
485+	RS485 communication port.
485-	Standard RS485 communication port must use shielded twisted pairs.
5V	5V power supply
GND	5V power ground

4.4.3 Input signal connection diagram

4.4.3.1 Input signal connection diagram

Figure 4-12 NPN mode

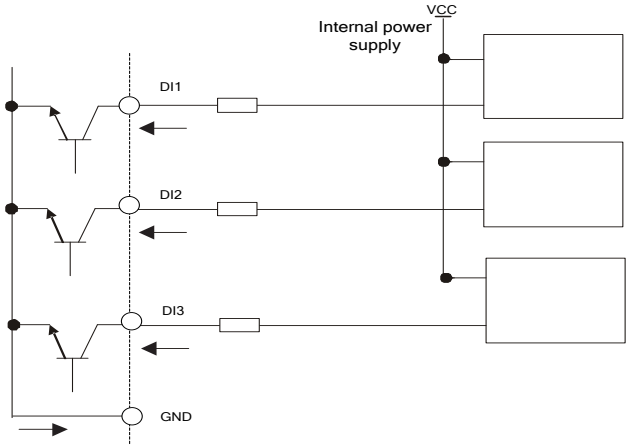

4.5 Power distribution protection

⚠	Do not connect any power source to the inverter output terminals U, V and W. The voltage applied to the motor cable may cause permanent damage to the inverter.

■ **Power cable and inverter protection**

In case of short circuit, the fuse protects input power cables to avoid damage to the inverter; if internal short-circuit occurs to the inverter, it can protect neighboring equipment from being damaged. The wiring diagram is shown in Figure 4-13.

Figure 4-13 Fuse configuration

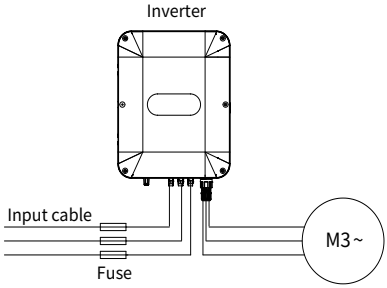

Note: Select the fuse according to section D.2 Breaker and electromagnetic contactor.

- **Motor and motor cable short-circuit protection**

  If the motor cable is selected based on inverter rated current, the inverter is able to protect the motor cable and motor without other protective devices during short circuit.

  Note: If the inverter is connected to multiple motors, use a separated thermal overload switch or breaker to protect the cable and motor, which may require the fuse to cut off the short circuit current.

- **Motor thermal overload protection**

  Once overload is detected, the power supply must be cut off. The inverter is equipped with the motor thermal overload protection function, which can block output and cut off the current (if necessary) to protect the motor.

- **Bypass connection protection**

  In some critical scenarios, the power/variable frequency conversion circuit needs to be configured to ensure proper operation of the system when a fault occurs to the inverter.

  If inverter status needs to be switched frequently, you can use the switch which carries mechanical interlock or a contactor to ensure motor terminals are not connected to input power cables and inverter output ends simultaneously.

5 Keypad operation guidelines

5.1 Keypad panel display

The inverter has been equipped with a LCD keypad as a standard configuration part, through which various functions can be realized, such as: controlling the start and stop, reading status data, setting parameters of the inverter.

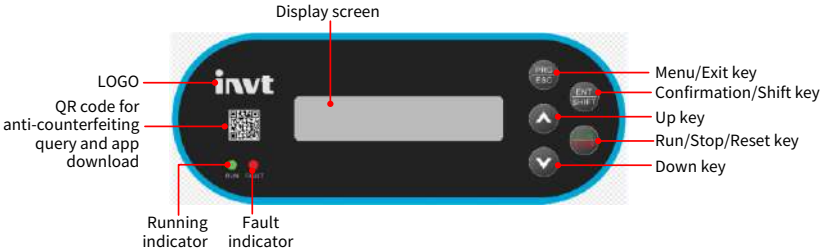

5.1.1 Indicator

Indicator		State	Meaning
RUN	Run indicator	● ON	Running
		○ Off	The inverter is stopped
FAULT	Fault indicator	● ON	The inverter is in fault state.
		○ Off	The inverter is in normal state.

5.1.2 Display screen

The display screen will display different content according to the operation scene.

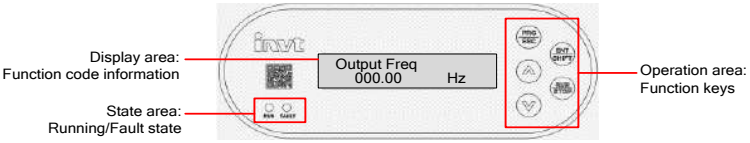

Display under the stopped state

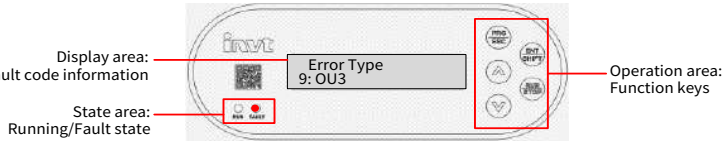

Display under the fault state

5.1.3 Key

Key		Function
PRG ESC	Menu/ Exit key	Press it to enter or exit level-1 menus or delete a parameter.
ENT SHIFT	Confirmation/ Shifting key	Press it to enter menus in cascading mode or confirm the setting of a parameter. Alternatively, press it to select digits to change during parameter setting, and press and hold to move the cursor left.
∧	Up key	Press it to increase data or move upward.
∨	Down key	Press it to decrease data or move downward.
RUN STOP	Run/Stop/ Reset key	Press it to run, stop, or reset the inverter.

5.2 Operation procedure

You can operate the inverter through the keypad homepage "menu" regardless of whether the inverter is stopped or running.

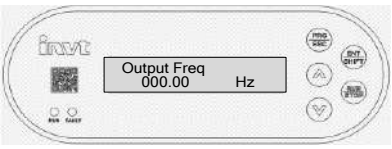

Homapage under the stopped state

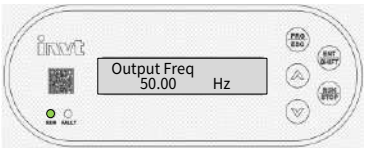

Homepage under the running state

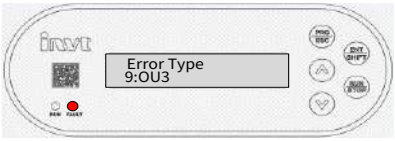

Homepage under the fault state

When a fault is detected, the keypad displays the fault code and the fault indicator is on. You can perform fault reset by using the RUN STOP key, control terminals, or communication commands.

5.2.1 Editing shortcut function code groups

The following figures show how to edit the shortcut function code groups in the stopped state.

Step 1 On the homepage in the stop state, press the ENT SHIFT key to enter the shortcut function code group page. Select a function group and press the ENT SHIFT key to enter the level-2 menu. Group1 Motor Params	Step 2 Press the ∨ key to select the function code group to be set, and press ENT SHIFT key to enter the level-3 menu. S1 Terminal Func P05.01
Step 3 Press the ∧ or ∨ key to select the required function code. S2 Terminal Func P05.02	Step 4 Press the ENT SHIFT key to enter the function code setting. S2 Terminal Func 43
Step 5 Press the ∧ or ∨ key to change the setting of the function code. S2 Terminal Func 42	Step 6 Press the ENT SHIFT key to confirm the setting and return to previous menu. If there is no change, press the PRG ESC key to return to previous menu. S2 Terminal Func P05.02
Step 7 Press the PRG ESC key to return to the shortcut function code group page. Group2 Terminal Func	Step 8 Press PRG ESC key to return to the homepage. Output Freq 00.00 Hz

5.2.2 Viewing and editing detailed function code groups

The operation example is as follows:

Step 1 On the homepage, press the PRG ESC key to enter the detailed function code group. Func Code: P00	Step 2 Press and hold the ENT SHIFT key to shift the cursor. Func Code: P00
Step 3 Press the ∧ or ∨ key to select the function code group, and press the ENT SHIFT key to confirm the selection. Func Code: P15	Step 4 Press the ∧ or ∨ key to select the required function code, and press the ENT SHIFT key to confirm the selection. KeypadSetVmppVot P15.02

Step 5 Press and hold the ENT SHIFT key to shift the cursor, and press the ∧ or ∨ key to change the function code value. KeypadSetVmppVot 0500.0 V	Step 6 Press the ENT SHIFT key to confirm the modification, return to the previous menu, and go to next function code automatically. If nothing should be changed, press the PRG ESC key to return to previous menu. PIDCtrl DeivaLim P15.03
Step 7 Press the PRG ESC key to return to the detailed function code group menu. Func Code: P15	Step 8 Press PRG ESC key to return to the homepage. Output Freq 00.00 Hz

5.2.3 Viewing status parameters on homepage

On the keypad homepage, you can view status parameters, such as output frequency, bus voltage, output voltage, output current, PV input power, inverter module temperature, control board software version, and keypad software version. The operation example is as follows:

On the homepage, press the ∧ key or ∨ key to switch the parameter display. Output Voltage 0378 V

5.2.4 Motor parameter autotuning

Step 1 On the homepage in the stop state, press the ENT SHIFT key to enter the shortcut function code group. Group1 Motor Params	Step 2 Select the motor parameter group, and press the ENT SHIFT key to enter the motor parameter function code. Motor1 Type P02.00
Step 3 Select P02.00 and press the ENT SHIFT key to enter the motor type setting. 0: Asynchronous motor (AM); 1: Synchronous motor (SM) Motor1 Type 0:AM	Step 4 Press the ENT SHIFT key to confirm the setting and return to the motor parameter group. Motor1 Type P02.00

Step 5 Set the motor parameter function code according to the motor nameplate. Set P02.01–P02.05 for AMs and set P02.15–P02.19 for SMs.	Step 6 Set P00.15 to 2, and press the ENT SHIFT key to confirm the setting. MotorParaAutotun 2:Static1
Step 7 Press the RUN STOP key to start the motor parameter autotuning. Press Run Key	Step 8 Wait for the motor parameter autotuning. MotorParaAutotun Waiting...
Step 9 Wait for the autotuning completion. MotorParaAutotun Finish	Step 10 When the keypad goes back to the parameter setting interface, press the PRG ESC key twice to return to the homepage. Output Freq 00.00 Hz

6 Commissioning

The simplified commissioning flowchart is as follows.

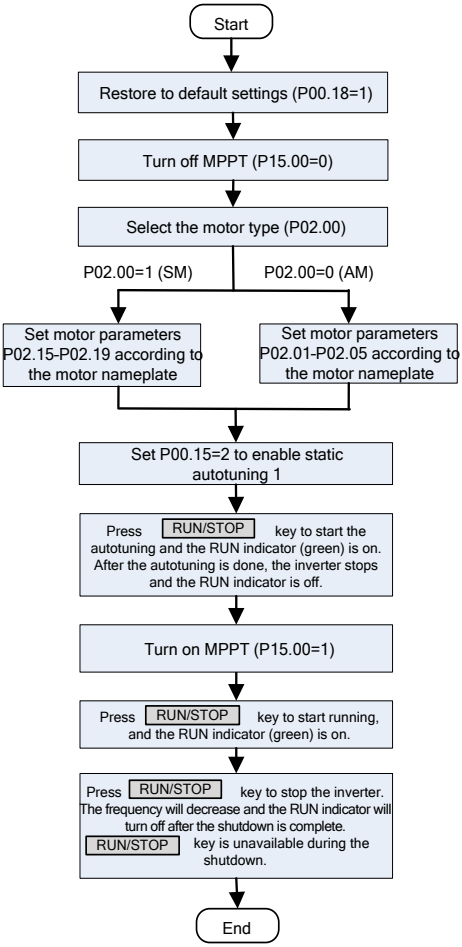

Note: To avoid the water hammer effect, the machine cannot be operated within approximately 18 seconds after the initial power-on or mode switching (switching between PV and AC), during which time the operating command cannot be issued.

6.1 Motor parameter setting

The product supports the control of three-phase AC asynchronous motors and permanent magnet synchronous motors. The parameters in group P02 are the motor parameters.

6.1.1 Motor type selection

Select the motor type by setting P02.00.

Function code	Name	Description	Setting range	Default
P02.00	Type of motor 1	0: Asynchronous motor (AM) 1: Synchronous motor (SM)	0–1	0

6.1.2 Rated motor parameter setting

■ **Set the rated parameters for the three-phase AC asynchronous motor based on the motor nameplate.**

Parameters P02.01–P02.05 are the parameters of AM 1.

Function code	Name	Description	Setting range	Default
P02.01	Rated power of AM 1	0.1–3000.0kW	0.1–3000.0	Model depended
P02.02	Rated frequency of AM 1	P00.03 specifies the max. output frequency.	0.01–P00.03	50.00Hz
P02.03	Rated speed of AM 1	1–60000rpm	1–60000	Model depended
P02.04	Rated voltage of AM 1	0–1200V	0–1200	Model depended
P02.05	Rated current of AM 1	0.8–6000.0A	0.8–6000.0	Model depended

■ **Set the rated parameters for the three-phase permanent-magnet synchronous motor based on the motor nameplate.**

Parameters P02.15–P02.19 are the parameters of SM 1.

Function code	Name	Description	Setting range	Default
P02.15	Rated power of SM 1	0.1–3000.0kW	0.1–3000.0	Model depended
P02.16	Rated frequency of SM 1	P00.03 specifies the max. output frequency.	0.01–P00.03	50.00Hz

Function code	Name	Description	Setting range	Default
P02.17	Number of pole pairs of SM 1	1–128	1–128	2
P02.18	Rated voltage of SM 1	0–1200V	0–1200	Model depended
P02.19	Rated current of SM 1	0.8–6000.0A	0.8–6000.0	Model depended

6.2 Parameter autotuning setting

To improve the motor control effect, it is recommended to set the motor rated parameters based on the motor nameplate at first power-on, and then perform parameter autotuning.

6.2.1 Motor parameter autotuning

The motor parameters have a significant impact on the calculation of the control model, especially in the case of vector control. The motor parameter autotuning is required first.

After setting motor parameters, you can P00.15 to select the autotuning method. The setting procedure is as follows:

Step 1 Set P00.01=1 to select the keypad as the command running channel.

Step 2 Set P00.15 to select one method from three motor parameter autotuning methods.

Step 3 Press the RUN key to give the start command. The motor enters autotuning.

Function code	Name	Description	Setting range	Default
P00.15	Motor parameter autotuning	0: No operation 1: Dynamic autotuning 2: Static autotuning 1 (complete autotuning) 3: Static autotuning 2 (partial autotuning)	0–3	0

Note:

- When P00.15 is set to 1, disconnect the motor from the load to put the motor in static and no-load state.
- When P00.15 is set to 2 or 3, there is no need to disconnect the motor from the load.
- Motor autotuning can be carried out on the present motor only. If you need to perform autotuning on the other motor, switch the motor first.

Table 6-1 Obtained motor parameters in different autotuning methods

Set value of P00.15	Autotuning parameters	
	AM 1	SM 1
1	P02.06–P02.14	P02.20–P02.23
2	P02.06–P02.10	P02.20–P02.22
3	P02.06–P02.08	

Note: If the autotuned parameters have deviation, SM 1 back-EMF constant P02.23 can be calculated.

Back-EMF constant can also be calculated based on the parameters on the motor nameplate, and there are three calculation methods.

Method 1: If the back-EMF coefficient K_e is marked on the nameplate, the calculation is as follows:

$$E = (K_e * n_N * 2\pi) / 60$$

Method 2: If the back-EMF E' (unit: V/1000r/min) is marked on the nameplate, the calculation is as follows:

$$E = E' * n_N / 1000$$

Method 3: If none of the two preceding parameters is marked on the nameplate, the calculation is as follows:

$$E = P / (\sqrt{3} * I)$$

In the formula, "n_N" indicates the rated speed, "P" indicates the rated power, and "I" indicates the rated current.

6.3 Running commands

The running commands are used to control the start, stop, forward running reverse running, and jogging of the inverter. There are three channels of running commands, namely external keypad, terminal, and communication. Set P00.01 to select a channel of running commands. After restarting from a power failure, the inverter remains the previous running or stopped state as it was before the power failure.

Function code	Name	Description	Setting range	Default
P00.01	Channel of running commands	0: External keypad 1: Terminal 2: Communication	0–2	1

One-click running function

The local LCD keypad has the highest priority and is not limited by P00.01. In the stopped state, press the RUN/STOP key, and the inverter will start running with the RUN indicator light on. Press the RUN/STOP key in the running state, the inverter stops. Pressing the RUN/STOP key during the stop process is ineffective. The RUN indicator will be off after the stop process is completed. For detailed operations on the keypad, please refer to chapter 5 Keypad operation guidelines.

Running commands set through the external keypad

When P00.01 is set to 0, you can control the inverter start or stop through the RUN/STOP key on the external keypad. After pressing the RUN key, the inverter starts running, and the RUN indicator turns on. In running state, if you press the STOP key, the inverter stops running, and the RUN indicator turns off.

Running commands set through the terminal

When P00.01 is set to 1, you can control the inverter start or stop through external terminals. The setting method is as follows:

Set (any of) P05.01–P05.04 to 1–6.

Function code	Name	Description	Setting range	Default
P05.01–P05.04	Function selection of multifunction digital input Terminal (S1–S4)	0: No function 1: Run forward (FWD) 2: Run reversely (REV) 3: Three-wire running control (S_{In}) 4: Jog forward 5: Jog reversely 6: Coast to stop	0–83	1 43 44 0

When P00.01 is set to 2, you can control the inverter start or stop by setting commands through communication. For details, see chapter 7 Communication.

6.4 Frequency setting

The inverter supports multiple kinds of frequency reference modes, and the reference channel is the A frequency reference channel.

6.4.1 Frequency setting method

The inverter provides multiple frequency setting methods. You can select a method by

setting P00.06.

Function code	Name	Description	Setting range	Default
P00.06	Setting channel of A frequency command	Specifies the frequency command source. 0: Keypad 1: AI1 2–7: Reserved 8: Modbus communication	0–8	0

6.4.1.1 Frequency set through keypad

When P00.06 is set to 0, keypad digital functions as the setting channel, and P00.10 specifies the original value of the digital set inverter frequency.

Function code	Name	Description	Setting range	Default
P00.10	Frequency set through keypad	P00.03 specifies the max. output frequency. When A frequency commands select the keypad for setting, P10.00 is the original value of the digital set inverter frequency.	0.00–P00.03	50.00Hz

6.4.1.2 Frequency set through communication

You can set P00.06 to 8 to enable setting frequency through communication. For details, see chapter 7 Communication.

6.5 Speed control mode selection

The inverter supports three speed control modes. You can set P00.00 to select the speed control mode based on actual conditions. Before using a vector control mode (0 or 1), set the motor nameplate parameters and perform motor parameter autotuning first. For details, see sections 6.1.2 Rated motor parameter setting and 6.2.1 Motor parameter autotuning.

Function code	Name	Description	Setting range	Default
P00.00	Speed control mode	0: SVC mode 0 1: SVC mode 1 2: Space voltage vector control mode	0–2	2

SVC mode 0: P00.00=0

It is applicable to the scenarios where high control accuracy and fast response are required. For details, see Group P03—Vector control of motor 1.

Note: The SM in this mode is applicable to large-power low frequency running rather than ultra-high speed running.

SVC mode 1: P00.00=1

It is applicable to the scenarios where mediocre control accuracy and response speed are enough. For details, see Group P03—Vector control of motor 1.

Space voltage vector control mod: P00.00= 2

It is applicable to the scenarios where mediocre control accuracy is enough.

6.6 Stop settings

6.6.1 Stop settings

You can select a stop mode by setting P01.08.

Function code	Name	Description	Setting range	Default
P01.08	Stop mode	0: Decelerate to stop 1: Coast to stop	0–1	0

6.7 Control performance regulation

6.7.1 Space vector control performance optimization

6.7.1.1 V/F curve setting

The inverter provides multiple V/F curve modes to meet different requirements. You can select V/F curves or set V/F curves as required.

For the load featuring constant torque, such as conveyor belt which runs in straight line, as the whole running process requires constant torque, it is recommended to adopt the straight line V/F curve.

For the load featuring decreasing torque, such as fan and water pumps, as there is a power (square or cube) relationship between its actual torque and speed, it is recommended to adopt the V/F curve corresponding to the power of 1.3, 1.7 or 2.0.

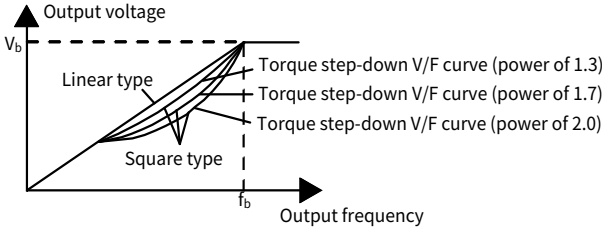

Note: In the figure, V_b indicates the motor rated voltage and f_b indicates the motor rated frequency.

Function code	Name	Description	Setting range	Default
P04.00	V/F curve setting of motor 1	0: Straight-line V/F curve (applicable to constant torque loads) 1: Multi-point V/F curve 2: Torque-down V/F curve (power of 1.3) 3: Torque-down V/F curve (power of 1.7) 4: Torque-down V/F curve (power of 2.0) 5: Reserved	0–5	0

6.7.1.2 Torque boost

Boost compensation to output voltage can effectively improve the low-speed torque performance in the V/F control. The cut-off frequency of manual torque boost is a percentage of the rated motor frequency f_b. Torque boost can improve the low-frequency torque characteristics in the V/F control.

You need to select torque boost based on the load. The load is proportional to the boost, but the boost cannot be too large. If the torque boost is too large, the motor will run at over-excitation, which may cause increased output current and motor overheating, thus decreasing the efficiency. The default torque boost is 0.0%, which indicates automatic torque boost so that the inverter can regulate the torque boost based on the actual load.

Set P04.01 to determine the torque boost of motor 1. Set P04.02 to determine the torque boost cut-off frequency of motor 1. Below this frequency threshold, torque boost is valid; exceeding this threshold will invalidate torque boost. See the following figure.

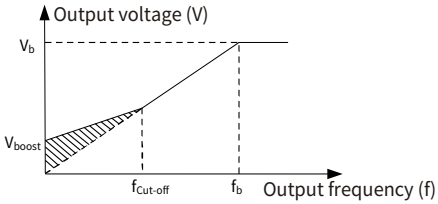

Function code	Name	Description	Setting range	Default
P04.01	Torque boost of motor 1	0.0% indicates the automatic torque boost, and 0.1–10.0% indicates the manual torque boost. **Note:** This parameter is relative to the max. output voltage V_b.	0.0–10.0	0.0%
P04.02	Torque boost cut-off frequency of motor 1	The cut-off frequency of manual torque boost is a percentage of the rated motor frequency f_b. Torque boost can improve the low-frequency torque characteristics in the V/F control.	0.0–50.0	20.0%

6.7.1.3 V/F slip compensation gain

The V/F control is an open-loop mode, while a sudden motor load change will cause motor rotation speed fluctuation. In cases where strict speed requirements must be met, you can set the slip compensation gain through P04.09 to change the inverter internal output adjustment method and therefore compensate for the speed change caused by load fluctuation, improving the motor mechanical rigidity.

The formula used to calculate the motor rated slip frequency is as follows: $\Delta f=f_b-n*p/60$

Of which, "f_b" is the rated frequency of the motor 1, corresponding to the parameter P02.02. "n" is the rated rotating speed of the motor 1, corresponding to the parameter P02.03. "p" is the number of pole pairs of the motor. 100.0% corresponds to the rated slip frequency △f of motor 1.

Function code	Name	Description	Setting range	Default
P04.09	V/F slip compensation gain of motor 1	100% corresponds to the rated slip frequency.	0.0–200.0	100.0%

Note: Rated slip frequency = (Rated synchronous rotation speed of motor – Rated rotation speed of motor) x (Number of motor pole pairs)/60.

6.7.1.4 Oscillation control

In large-power driving scenarios, using the space voltage vector control mode will cause motor oscillation, which can be eliminated by setting P04.10 and P04.11, while the oscillation control threshold of motor 1 is specified by P04.12.

Function code	Name	Description	Setting range	Default
P04.10	Low-frequency oscillation control factor of motor 1	Setting a greater value indicates better control effect. However, if the value is too large, the inverter output current may be too large.	0–100	10
P04.11	High-frequency oscillation control factor of motor 1		0–100	10
P04.12	Oscillation control threshold of motor 1		0.00–P00.03	30.00Hz

6.7.1.5 Speed loop

The following uses motor 1 for example.

The speed loop dynamic response characteristics in vector control can be adjusted by setting the proportional coefficient and integral time of speed regulator.

The dynamic response of speed regulator can be accelerated by increasing the proportional gain or decreasing the integral time. However, too quick dynamic response of speed regulator can cause oscillations.

Recommended adjustment method: If the default settings can not meet the requirements, adjust the settings slightly. First, increase the proportional gain to ensure that the system does not oscillate; and then reduce the integration time, so that the system responds fast with small overshoot.

Improper PI parameter settings will cause large speed overshoot.

The switchover between the low-point frequency for switching and the high-point frequency for switching indicates the linear switchover between two groups of PI parameters. See the following figure.

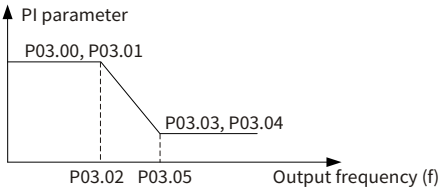

Function code	Name	Description	Setting range	Default
P03.00	Speed-loop proportional gain 1	Speed regulator PI parameters are divided into the low-speed group and high-speed group. When the running frequency is less than P03.02, the speed regulator PI parameters are P03.00 and P03.01. When the running frequency is greater than P03.05, the speed regulator PI parameters are P03.03 and P03.04.	0.0–200.0	20.0
P03.01	Speed-loop integral time 1		0.000–10.000	0.200s
P03.02	Low-point frequency for switching		0.00–P03.05	5.00Hz
P03.03	Speed-loop proportional gain 2		0.0–200.0	20.0
P03.04	Speed-loop integral time 2	-	0.000–10.000	0.200s
P03.05	High-point frequency for switching	-	P03.02–P00.03	10.00Hz
P03.06	Speed-loop output filter	-	0–8	0

6.7.1.6 Current loop

The following uses motor 1 for example.

In vector control mode, the current-loop PI parameters are as shown in P03.09 and P03.10.

Function code	Name	Description	Setting range	Default
P03.09	Current loop proportional	The two parameters impact the dynamic response speed and control accuracy of	0–65535	1000

Function code	Name	Description	Setting range	Default
	coefficient P	the system. Generally, you do not need to modify the two function codes. It is applicable to SVC 0 and SVC 1.		
P03.10	Current-loop integral coefficient I		0–65535	1000

Note:

- A great current-loop proportional coefficient P indicates strong regulator effect. A great current-loop proportional coefficient I indicates strong regulator effect. This is reverse to the speed-loop integral coefficient time effect.
- For asynchronous motor control, using the default values of current-loop parameters can meet the requirements of most applications.
- For synchronous motor control, the current-loop parameters have a great impact on the speed control response and instantaneous current convergence, and therefore you need to increase the current-loop parameter values in scenarios such as with current divergence and motor stalling.
- If the SM sounds abnormally during running, in addition to decreasing the speed-loop parameters, decrease current-loop PI parameters. Generally, small motor straight axis and cross axis inductance requires great current-loop PI parameter values.

6.8 Input and output

6.8.1 Digital input and output

6.8.1.1 Digital input

The inverter carries three programmable digital input terminals, and an optional fourth programmable digital input terminal can be added. The function of all the digital input terminals can be programmed through function codes.

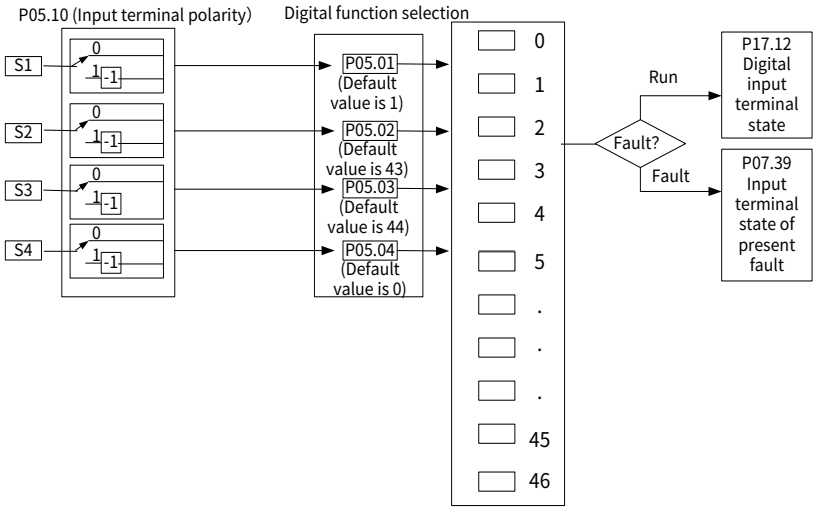

Note: Two different multifunction input terminals cannot be configured with a same function.

P05.01–P05.04 are used to set the functions of digital multifunction input terminals. Terminal functions are set as follows.

Setting	Function	Description
0	No function	The inverter does not act even if there is signal input. Set unused terminals to "no function" to avoid misaction.
1	Run forward	External terminals are used to control the forward/reverse running of the inverter.
2	Run reversely	
3	Reserved	-
4	Jog forward	For details about frequency of jogging running and ACC/DEC time of jogging running, see the description for P08.06, P08.07, and P08.08.
5	Jog reversely	
6	Coast to stop	The inverter blocks output, and the stop process of motor is uncontrolled by the inverter. This mode is applied in the scenarios with large-inertia loads and without stop time requirements. Its definition is the same as P01.08, and it is mainly used in remote control.
7	Fault reset	External fault reset function, same as the reset function of the STOP/RST key on the keypad. You can use this function to reset faults remotely.

Setting	Function	Description
8	Pause running	The inverter decelerates to stop, however, all the run parameters are in memory state, such as PLC parameter, wobbling frequency, and PID parameter. After this signal disappears, the inverter will revert to the state before stop.
9	External fault input	When external fault signal is transmitted to the inverter, the inverter releases fault alarm and stops.
10–35	Reserved	-
36	Switch the running command channel to keypad	When the function is enabled, the running command channel is switched to keypad. When the function is disabled, the running command channel is restored to the previous setting.
37	Switch the running command channel to terminal	When the function is enabled, the running command channel is switched to terminal. When the function is disabled, the running command channel is restored to the previous setting.
38	Switch the running command channel to communication	When the function is enabled, the running command channel is switched to communication. When the function is disabled, the running command channel is restored to the previous setting.
39–41	Reserved	-
42	Forcibly switch to power frequency	When the function is enabled, and the machine is powered on without phase loss, the software forcibly switches to the AC mode, otherwise it remains in its original state.
43	Full-water signal	When the function is enabled, it indicates that the water level sensor is providing a full-water signal feedback.
44	Empty-water signal	When the function is enabled, it indicates that the water level sensor is providing a empty-water signal feedback.
45	Reserved	-
46	PV digital input without boost module	This function is generally used with the QH100 automatic switching module. When the function is enabled, it indicates that the PV voltage meets the normal power supply requirements.
47–63	Reserved	-

Related parameters are listed in the following.

Function code	Name	Description	Setting range	Default
P05.01	Function of S1	For details, see the preceding table.	0–63	1

Function code	Name	Description	Setting range	Default
P05.02	Function of S2			43
P05.03	Function of S3			44
P05.04	Function of S4			0
P05.10	Input terminal polarity selection	The function code is used to set the polarity of input terminals. When a bit is 0, the input terminal is positive. when a bit is 1, the input terminal is negative.	0x00–0x3F	0x00
P07.39	Input terminal status at present fault	-	0x0000–0xFFFF	0x0000
P17.12	Digital input terminal state	-	0x00–0x3F	0x00

6.8.1.2 Digital output

The inverter carries one group of relay output terminals. All the digital output terminal functions can be specified by function codes.

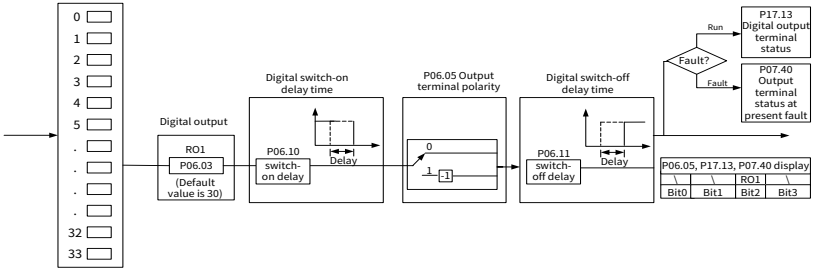

The following table lists the options of function code P06.03. A same output terminal function can be repeatedly selected.

Setting	Function	Description
0	Invalid	The output terminal does not have any function.
1	Running	The ON signal is output when there is frequency output during running.
2	Running forward	The ON signal is output when there is frequency output during forward running.
3	Running reversely	The ON signal is output when there is frequency output during reverse running.

Setting	Function	Description
4	Jogging	The ON signal is output when there is frequency output during jogging.
5	Inverter fault	The ON signal is output when an inverter fault occurred.
6–13	Reserved	-
14	Overload pre-alarm	Output ON signal after the pre-alarm time elapsed based on the pre-alarm threshold; see P11.08–P11.10 for details.
15	Underload pre-alarm	The ON signal is output after the pre-alarm time elapsed based on the pre-alarm threshold.
16–19	Reserved	-
20	External fault is valid	The ON signal is output when an external fault occurred to the inverter.
21	Reserved	-
22	Running time reached	The ON signal is output when the total running time of the inverter exceeds the factory set time.
23–25	Reserved	-
26	DC bus voltage established	When the bus voltage is above the inverter undervoltage, the output is valid.
27	Weak-light pre-alarm	When the PV voltage is lower than the PV undervoltage point, the output is valid.
28	Switch to power frequency through threshold determination	In automatic switching mode, if the PV voltage is below its comparison threshold, the software switches to the AC mode and the output is valid.
29	Switch to power frequency through S terminal determination	When the terminal forcibly switches to the AC mode successfully, the output is valid.
30	Switch to PV	When the software is in PV mode, the output is valid.
31	Dry-pumping pre-alarm	The ON signal is output after the pre-alarm time elapsed based on the solar pump-dedicated function pre-alarm threshold.
32	Full-water pre-alarm	The ON signal is output after the pre-alarm time elapsed based on the solar pump-dedicated function pre-alarm threshold.
33	Empty-water pre-alarm	The ON signal is output after the pre-alarm time elapsed based on the solar pump-dedicated function pre-alarm threshold.

Related parameters are listed in the following.

Function code	Name	Description	Setting range	Default
P06.03	RO1 output	For details, see the preceding table.	0–33	30
P06.05	Output terminal polarity selection	The function code is used to set the polarity of output terminals. When the current bit is set to 0, the output terminal is positive. When the current bit is set to 1, the output terminal is negative. Bit3: -; Bit2: RO1; Bit1: -; Bit0: -	0x00–0x0F	0x00
P06.10	RO1 switch-on delay	The function code is used to specify the delay time corresponding to the electrical level changes when the programmable output terminals switch on or switch off. 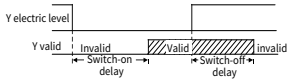	0.00–500.00	10.00s
P06.11	RO1 switch-off delay			
P07.40	Output terminal status at present fault	Setting range: 0x0000–0xFFFF	0x0000–0xFFFF	0x0000
P17.13	Digital output terminal status	Displays the present digital output terminal state of the inverter. Bit3: -; Bit2: RO1; Bit1: -; Bit0: -	0x00–0x0F	0x00

6.9 RS485 communication

The communication addresses on the communication network are unique, which is the basis of the point-to-point communication between the host controller and inverter. When the master writes the slave communication address to 0 indicating a broadcast address in a frame, all the salves on the Modbus bus receive the frame but do not respond to it. The local communication address is specified by P14.00. The communication response delay is specified by P14.03, and the RS485 communication timeout time is specified by P14.04.

There are four transmission error processing methods, which can be selected through P14.05. Option 2 (Stop in enabled stop mode without reporting an alarm) is applicable only to the communication mode.

Function code	Name	Description	Setting range	Default
P14.00	Local communication address	**Note:** The communication address of a slave cannot be set to 0.	1–247	1
P14.01	Communication baud rate setting	The function code is used to set the rate of data transmission between the upper computer and the inverter. 0: 1200bps 1: 2400bps 2: 4800 bps 3: 9600 bps 4: 19200 bps 5: 38400 bps 6: 57600 bps **Note:** The baud rate set on the inverter must be consistent with that on the host controller. Otherwise the communication fails. A greater baud rate indicates faster communication.	0–6	4
P14.02	Data bit check setting	The data format set on the inverter must be consistent with that on the upper computer. Otherwise, the communication fails. 0: No check (N, 8, 1) for RTU 1: Even check (E, 8, 1) for RTU 2: Odd check (O, 8, 1) for RTU 3: No check (N, 8, 2) for RTU 4: Even check (E, 8, 2) for RTU 5: Odd check (O, 8, 2) for RTU	0–5	1
P14.03	Communication response delay	The function code indicates the communication response delay, that is, the interval from when the inverter completes receiving data to when it sends response data to the host controller. If the response delay is shorter than the rectifier processing time, the rectifier sends response data to the host controller after processing	0–200	5ms

Function code	Name	Description	Setting range	Default
		data. If the delay is longer than the rectifier processing time, the rectifier does not send response data to the host controller until the delay is reached although data has been processed.		
P14.04	RS485 communication timeout time	When P14.04 is set to 0.0, the communication timeout time is invalid. When P14.04 is set to a non-zero value, the system reports the "Modbus/Modbus TCP communication fault" (CE) if the communication interval exceeds the value. In general, the function code is set to 0.0. When continuous communication is required, you can set the function code to monitor communication status.	0.0–60.0	0.0s
P14.05	Transmission error processing	0: Report an alarm and coast to stop 1: Keep running without reporting an alarm 2: Stop in enabled stop mode without reporting an alarm (applicable only to communication mode) 3: Stop in enabled stop mode without reporting an alarm (applicable to any mode)	0–3	0
P14.06	Modbus communication processing action selection	Ones place: 0: Respond to write operations 1: Not respond to write operations Tens place: 0: Communication password protection is invalid. 1: Communication password protection is valid.	0x00–0x11	0x00

6.10 Monitoring parameters

Monitoring parameters mainly fall in groups P07, P17, and P18, which are used to view and analyze the inverter control and use status. The monitored content is listed in the following.

Category	Type	Monitored content
Group P07	HMI	Inverter information, module temperature, run time, fault history, and software version
Group P17	Basic status viewing	Frequency information, current information, voltage information, torque and power information, input terminal information, and output terminal information
Group P18	Status viewing functions special for solar pump	MPPT control parameters and pump state

Group P07—Human-machine interface (HMI)

Function code	Name	Description	Default	Modify
P07.00	User password	By default, the user password is not enabled (the default value is 0). When you set the function code to a non-zero number, password protection is enabled. If you set the function code to 00000, the previous user password is cleared and password protection is disabled. After the user password setting takes effect, you need to enter the password to view or edit parameters. Please remember your password and save it in a secure place. After you exit the function code editing interface, the password protection function is enabled within 1 minute. If password protection is enabled, "0.0.0.0.0" is displayed when you press the PRG/ESC key again to enter the function code editing interface. You need to enter the correct user password to	0	○

Function code	Name	Description	Default	Modify
		enter the interface. Setting range: 0–65535		
P07.02	Key function selection	Setting range: 0x00–0x27 Ones place: Function of QUICK key on the LED keypad 0: No function 1–5: Reserved 6: Switch command channels in sequence 7: Reserved Tens place: Reserved	0x06	○
P07.03	Sequence of switching running-command channels by pressing QUICK	The function code is used to set the sequence of switching running-command channels by pressing the key when P07.02=6. Setting range: 0–3 0: Keypad→Terminal→Communication 1: Keypad←→Terminal 2: Keypad←→Communication 3: Terminal←→Communication	1	○
P07.04	Stop function validity of STOP/RST	Specifies the validness range of stop function of the STOP/RST key on the LED keypad. For fault reset, the key is valid in any conditions. Setting range: 0–3 0: Valid for keypad control only 1: Valid both for keypad and terminal control 2: Valid both for keypad and communication control 3: Valid for all control modes	3	○
P07.11	Rectifier bridge temperature	Setting range: -20.0–120.0°C	0.0°C	●
P07.12	Inverter module temperature	Setting range: -20.0–120.0°C	0.0°C	●
P07.13	Control board software version	Setting range: 1.00–655.35	Version depended	●

Function code	Name	Description	Default	Modify
P07.14	Local accumulative running time	Setting range: 0–65535h	0h	●
P07.21	Factory bar code 1	Setting range: 0x0000–0xFFFF	Model depended	●
P07.22	Factory bar code 2	Setting range: 0x0000–0xFFFF	Model depended	●
P07.23	Factory bar code 3	Setting range: 0x0000–0xFFFF	Model depended	●
P07.24	Factory bar code 4	Setting range: 0x0000–0xFFFF	Model depended	●
P07.25	Factory bar code 5	Setting range: 0x0000–0xFFFF	Model depended	●
P07.26	Factory bar code 6	Setting range: 0x0000–0xFFFF	Model depended	●
P07.27	Present fault type	Setting range: 0–9999 0: No fault 1: Inverter unit U-phase protection (E1) 2: Inverter unit V-phase protection (E2) 3: Inverter unit W-phase protection (E3) 4: Overcurrent during acceleration (E4) 5: Overcurrent during deceleration (E5) 6: Overcurrent during constant speed running (E6) 7: Overvoltage during acceleration (E7) 8: Overvoltage during deceleration (E8) 9: Overvoltage during constant speed running (E9) 10: DC bus undervoltage (E10) 11: Motor overload (E11) 12: Inverter overload (E12) 13: Phase loss on input side (E13) 14: Phase loss on output side (E14) 16: Inverter module overheat (E16) 17: External fault (E17) 18: RS485 communication fault (E18) 19: Current detection fault (E19) 20: Motor autotuning fault (E20)	0	●
P07.28	Last fault type		0	●
P07.29	2nd-last fault type		0	●
P07.30	3rd-last fault type		0	●
P07.31	4th-last fault type		0	●
P07.32	5th-last fault type		0	●

Function code	Name	Description	Default	Modify
		21: EEPROM operation error (E21) 22: PID feedback offline (E22) 23: Braking unit fault (E23) 25: Electronic overload (E25) 26: Keypad communication error (E26) 27: Parameter upload error (E27) 28: Parameter download error (E28) 32: To-ground short-circuit fault (E32) 34: Speed deviation fault (E34) 35: Mal-adjustment fault (E35) 36: Underload fault (E36) 96: No upgrade bootload (E96) 536: Hydraulic probe damage (E536) 576: Lightning strike fault (E576) 9020: Weak-light alarm (A9020) 9021: Dry pumping alarm (A9021) 9022: Full-water alarm (A9022) 9023: Empty-water alarm (A9023) 9024: Mains power not connected alarm (A9024)		
P07.33	Running frequency at present fault	Setting range: 0.00Hz–P00.03	0.00Hz	●
P07.34	Ramp reference frequency at present fault	Setting range: 0.00Hz–P00.03	0.00Hz	●
P07.35	Output current at present fault	Setting range: 0–1200V	0V	●
P07.36	Output current at present fault	Setting range: 0.0–6300.0A	0.0A	●
P07.37	Bus voltage at present fault	Setting range: 0.0–2000.0V	0.0V	●
P07.38	Max. temperature at present fault	Setting range: -20.0–120.0°C	0.0°C	●
P07.39	Input terminal status at present	Setting range: 0x0000–0xFFFF	0x0000	●

Function code	Name	Description	Default	Modify
	fault			
P07.40	Output terminal status at present fault	Setting range: 0x0000–0xFFFF	0x0000	●
P07.41	Running frequency at last fault	Setting range: 0.00Hz–P00.03	0.00Hz	●
P07.42	Ramp reference frequency at last fault	Setting range: 0.00Hz–P00.03	0.00Hz	●
P07.43	Output voltage at last fault	Setting range: 0–1200V	0V	●
P07.44	Output current at last fault	Setting range: 0.0–6300.0A	0.0A	●
P07.45	Bus voltage at last fault	Setting range: 0.0–2000.0V	0.0V	●
P07.46	Temperature at last fault	Setting range: -20.0–120.0°C	0.0°C	●
P07.47	Input terminal status at last fault	Setting range: 0x0000–0xFFFF	0x0000	●
P07.48	Output terminal status at last fault	Setting range: 0x0000–0xFFFF	0x0000	●
P07.49	Running frequency at 2nd-last fault	Setting range: 0.00Hz–P00.03	0.00Hz	●
P07.50	Ramp reference frequency at 2nd-last fault	Setting range: 0.00Hz–P00.03	0.00Hz	●
P07.51	Output voltage at 2nd-last fault	Setting range: 0–1200V	0V	●
P07.52	Output current at 2nd-last fault	Setting range: 0.0–6300.0A	0.0A	●
P07.53	Bus voltage at 2nd-last fault	Setting range: 0.0–2000.0V	0.0V	●
P07.54	Temperature at	Setting range: -20.0–120.0°C	0.0°C	●

Function code	Name	Description	Default	Modify
	2nd-last fault			
P07.55	Input terminal status at 2nd-last fault	Setting range: 0x0000–0xFFFF	0x0000	●
P07.56	Output terminal status at 2nd-last fault	Setting range: 0x0000–0xFFFF	0x0000	●
P07.57	6th-last fault type	Same as the description for P07.27	0	●
P07.58	7th-last fault type		0	●
P07.59	8th-last fault type		0	●
P07.60	9th-last fault type		0	●
P07.61	10th-last fault type		0	●
P07.62	11th-last fault type		0	●
P07.63	12th-last fault type		0	●
P07.64	13th-last fault type		0	●
P07.65	14th-last fault type		0	●
P07.66	Present pre-alarm type		0	●
P07.67	Last pre-alarm type		0	●
P07.68	2nd-last pre-alarm type		0	●
P07.69	3rd-last pre-alarm type		0	●
P07.70	4th-last pre-alarm type		0	●
P07.71	5th-last pre-alarm type		0	●

Group P17—Status viewing

Function code	Name	Description	Default	Modify
P17.00	Set frequency	Displays the present set frequency of the inverter. Setting range: 0.00Hz–P00.03	0.00Hz	●
P17.01	Output frequency	Displays the present output frequency of the inverter. Setting range: 0.00Hz–P00.03	0.00Hz	●
P17.02	Ramp reference frequency	Displays the present ramp reference frequency of the inverter. Setting range: 0.00Hz–P00.03	0.00Hz	●
P17.03	Output voltage	Displays the present output voltage of the inverter. Setting range: 0–1200V	0V	●
P17.04	Output current	Displays the valid value of present output current of the inverter. Setting range: 0.0–5000.0A	0.0A	●
P17.05	Motor rotation speed	Displays the present motor rotation speed. Setting range: 0–65535rpm	0rpm	●
P17.06	Torque current	Displays the present torque current of the inverter. Setting range: -3000.0–3000.0A	0.0A	●
P17.07	Exciting current	The function code is used to display the present exciting current of the inverter. Setting range: -3000.0–3000.0A	0.0A	●
P17.08	Motor power	The function code is used to displays the present motor power. 100% corresponds to the motor rated power. Setting range: -300.0–300.0%	0.0%	●
P17.09	Motor output torque	The function code is used to display the present output torque of the inverter. 100% corresponds to the rated motor torque. Setting range: -250.0–250.0%	0.0%	●
P17.10	Estimated motor frequency	The function code is used to display the estimated motor rotor frequency under the open-loop vector condition. Setting range: 0.00Hz–P00.03	0.00Hz	●

Function code	Name	Description	Default	Modify
P17.11	DC bus voltage	Displays the present DC bus voltage of the inverter. Setting range: 0.0–2000.0V	0.0V	●
P17.12	Digital input terminal status	Displays the present digital input terminal state of the inverter. Setting range: 0x0 –0xF Corresponds to S4, S3, S2, and S1 respectively	0x0	●
P17.13	Digital output terminal status	Displays the present digital output terminal state of the inverter. Setting range: 0x0 –0xF Corresponds to RO2, RO1, HDO and Y1 respectively	0x0	●
P17.38	Current of main winding	The function code is used to display the single-phase motor main winding current (when the single-phase motor is controlled by removing capacitors). Setting range: 0.00–100.00A	0.00A	●
P17.39	Current of secondary winding	The function code is used to display the single-phase motor secondary winding current (when the single-phase motor is controlled by removing capacitors). Setting range: 0.00–100.00A	0.00A	●

6.11 Protection parameter setting

6.11.1 Current-limit protection

During accelerated running, as the load is too large, the actual acceleration rate of motor is lower than that of output frequency, if no measures are taken, the inverter may trip due to overcurrent during acceleration.

Current-limit protection function detects output current during running, and compares it with the current-limit level defined by P11.06, if it exceeds the current-limit level, the inverter will run at stable frequency during accelerated running, or run in decreased frequency during constant-speed running; if it exceeds the current-limit level continuously, the inverter output frequency will drop continuously until reaching lower limit frequency. When the output current is detected to be lower than the current-limit level again, it will continue accelerated running. In some heavy load scenarios, you can increase the value of P11.06 to improve the inverter output torque.

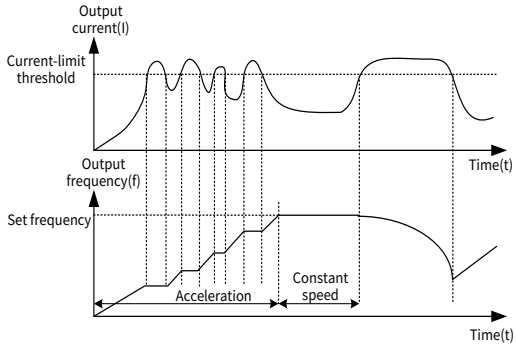

Function code	Name	Description	Setting range	Default
P11.05	Current limit mode	During accelerated running, as the load is too large, the actual acceleration rate of motor is lower than that of output frequency. To prevent the inverter trip due to overcurrent during acceleration, take the current limit measures. Ones place: Current limit action 0: Invalid 1: Always valid Tens place: Hardware current limit overload alarm 0: Valid 1: Invalid	0x00–0x11	0x01
P11.06	Automatic current limit threshold	Percentage of the inverter rated output current.	50.0–180.0	For the G type: 160.0% For the P type: 120.0%
P11.07	Frequency decrease ratio in current limiting	-	0.00–50.00	10.00Hz/s

6.11.2 Frequency decrease at sudden power failure

This function enables the system to keep running at sudden short-period power failure. When power failure occurs, the motor is in the power generation state, the bus voltage is kept at the action determination voltage for frequency decrease at sudden power failure,

preventing the inverter from stop due to undervoltage.

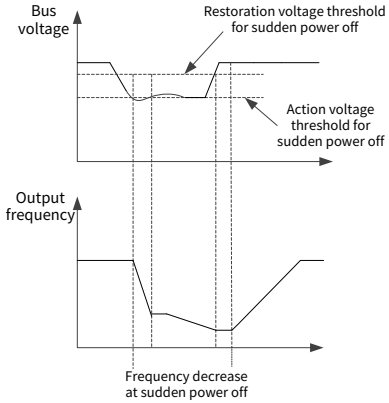

Function code	Name	Description	Setting range	Default
P11.01	Frequency decrease at sudden power failure	380V: 537V; 220V: 311V The output frequency starts decreasing when the bus is detected to be below the percentage mentioned above.	20.0–120.0	80.0%
P11.02	Frequency drop rate at transient power-off	0.00Hz: Disable the frequency decrease at power failure	0.00– P00.03	10.00Hz/s

Note: The function of frequency decrease due to power loss requires disabling the MPPT function (P15.00=0). When AC power is detected as connected successfully, the function of frequency decrease due to power loss becomes inactive.

6.12 Specialized function commissioning

6.12.1 Weak-light protection function

In case of insufficient sunshine, the output frequency of solar pump will be reduced. When the output frequency is less than P15.05, the delay counting is started. After the time specified in P15.23 is reached, the system reports the weak-light alarm(A-LS) and then sleeps. In the non-continuous situation, the delay counter is automatically cleared. In addition, when the PV voltage is lower than 70V, the system directly reports the weak-light alarm without any delay.

When the weak-light pre-alarm is detected, the pre-alarm will be automatically canceled after P15.24.

Function code	Name	Description	Default
P15.23	Weak-light delay	When the output frequency is less than or equal to the PI output frequency lower limit and the delay counting is started, which reaches the weak-light delay time, the system reports the weak-light alarm (A-LS) and then sleeps. In the non-continuous situation, the delay counter is automatically cleared. Setting range: 0.0–3600.0s **Note:** ● When the bus voltage is lower than the undervoltage point or the PV voltage is lower than 70V, the system directly reports the weak-light alarm without any delay. ● When P15.32=0, in weak-light condition, the system automatically switch to the power-frequency input mode.	100.0s
P15.24	Weak-light wake-up delay	If the PV voltage is greater than the PV startup voltage (P19.08) under weak-light alarm, the system clears the alarm with the weak-light wake-up delay and then re-enters the running state. When P15.32=0, if the PV voltage is greater than P15.34, the system switches from the power-frequency input mode to the PV input mode with the weak-light wake-up delay. Setting range: 0.0–3600.0s	300.0s

6.12.2 Full-water and empty-water protection function

The full-water protection function is mainly used for the water storage tank or reservoir. When the water level is higher than the high water level warning line, after P15.14, the solar pump will report the full-water pre-alarm and decelerate to stop.

The empty-water protection function is mainly used for the water source or well. When the water level is lower than the low water level warning line, after P15.16, the solar pump will

report the empty-water pre-alarm and decelerate to stop.

The following figure shows the function diagram when P15.11=0 (digital input).

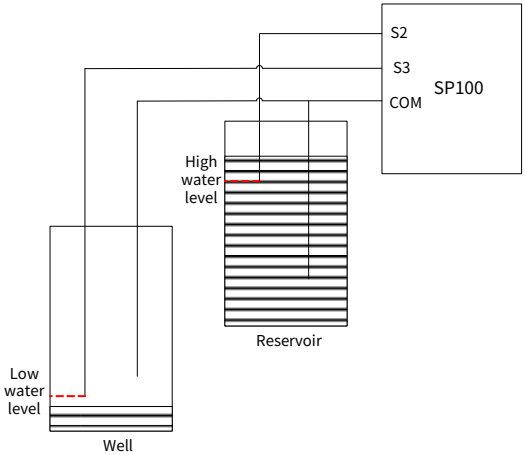

In case of the empty-water pre-alarm, if the water level drops below the high water level warning line, the pre-alarm will be cleared automatically after P15.15, and the machine will restart.

In case of the empty-water pre-alarm, if the water level goes higher than the low water level warning line, the pre-alarm will be cleared automatically after P15.17, and the machine will restart.

Function code	Name	Description	Default
P15.11	Water level control selection	Setting range: 0–1 0: Control through digital input 1: Control through AI1 input	0
P15.12	Full-water level threshold	Setting range: 0.0%–P15.13	25.0%
P15.13	Empty-water level threshold	Setting range: P15.12–100.0%	75.0%
P15.14	Full-water level delay	Time setting on full-water level delay. This parameter is still valid for digital full-water signal. Setting range: 0–10000s	5s
P15.15	Full-water level wake-up delay	Time setting on full-water level wake-up delay. This parameter is still valid for digital full-water signal. Setting range: 0–10000s	20s

Function code	Name	Description	Default
P15.16	Empty-water level delay	Time setting on empty-water level delay. This parameter is still valid for digital empty-water signal. Setting range: 0–10000s	5s
P15.17	Empty-water level wake-up delay	Time setting on empty-water level wake-up delay. This parameter is still valid for digital empty-water signal. Setting range: 0–10000s	20s

6.12.3 Dry pumping prevention function

The dry pumping prevention function is to protect the water pump. When the solar pump detects that the water pump is in dry pumping state, after P15.19, the solar pump will report a dry pumping pre-alarm and decelerate to stop. There are two methods to detect the dry pumping, which can be selected through P15.22.

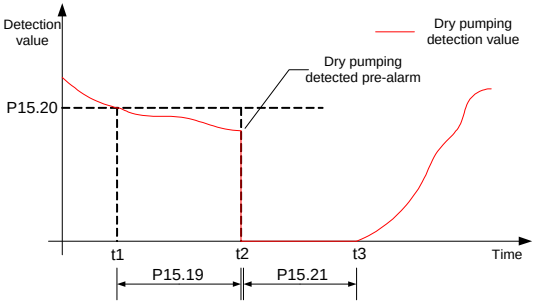

In case of the dry pumping pre-alarm, after the time specified in P15.21, the pre-alarm will be automatically cleared and the machine will restart.

Function code	Name	Description	Default
P15.19	Dry pumping detection time	When the dry pumping prevention detection value (based on the percentage of P15.22) is less than P15.20 and lasts for P15.19, a dry pumping alarm (A9021) is reported. Setting range: 0.0–1000.0s	60.0s
P15.20	Dry pumping threshold	Setting range: 0.0–100.0%	0.0%
P15.21	Dry pumping reset	In case of the dry pumping alarm, after the	660.0s

Function code	Name	Description	Default
	delay	time specified in P15.21, the machine will reset automatically. Setting range: 0.0–6000.0s	
P15.22	Dry-pumping prevention selection	Setting range: 0–1 0: Determined based on output power 1: Determined based on output current	0

6.12.4 Automatic switching

SP100 series AC/DC models with BOOST modules support simultaneous AC/DC access, and the AC/DC automatic switching function can be realized by setting P15.32=0. When the mains power and solar panel are connected at the same time and the PV voltage exceeds P15.34, and the system switches to the PV mode after P15.24. When the PV voltage is lower than P15.33, the system switches to the AC mode immediately.

In AC mode, the set frequency is the motor rated frequency. In PV mode, the set frequency is calculated from the MPPT controller.

Function code	Name	Description	Default
P15.23	Weak-light delay	When the output frequency is less than or equal to the PI output frequency lower limit and the delay counting is started, which reaches the weak-light delay time, the system reports the weak-light alarm (A-LS) and then sleeps. In the non-continuous situation, the delay counter is automatically cleared. Setting range: 0.0–3600.0s **Note:** ● When the bus voltage is lower than the undervoltage point or the PV voltage is lower than 70V, the system directly reports the weak-light alarm without any delay. ● When P15.32=0, in weak-light condition, the system automatically switch to the power-frequency input mode.	100.0s

Function code	Name	Description	Default
P15.24	Weak-light wake-up delay	If the PV voltage is greater than the PV startup voltage (P19.08) under weak-light alarm, the system clears the alarm with the weak-light wake-up delay and then re-enters the running state. When P15.32=0, if the PV voltage is greater than P15.34, the system switches from the power-frequency input mode to the PV input mode with the weak-light wake-up delay. Setting range: 0.0–3600.0s	300.0s
P15.32	Selection between PV input and power frequency input	If P15.32 is set to 0, the system switches between PV input and power frequency input according to the detected PV voltage and switching threshold. If P15.32 is set to 1, the system switches to power frequency input when it detects successful AC power connection; otherwise, it switches to PV input. If P15.32 is set to 2, the system forcibly switches to PV input. Setting range: 0–2 0: Automatic mode 1: Hybrid power supply mode 2: PV input mode **Note:** This parameter is invalid when terminal input function 42 is valid.	2
P15.33	Threshold setting for switching to power frequency input	When the PV voltage is lower than the threshold or in case of weak light, you can switch to power frequency input through the relay output. Setting range: 0.0V–P15.34 (0.0: invalid) **Note:** The startup voltage of the boost module is 80V, and the minimum working voltage is 70V. For models without the boost module, the switching voltage point is set by the external voltage detection circuit. For	70.0V

Function code	Name	Description	Default
		models with the boost module, the switching voltage point is 70V.	
P15.34	Threshold setting for switching to PV input	When the PV voltage is higher than the threshold, the system switches to the PV input through the relay output after the weak-light wake-up delay. To avoid switching back and forth, this threshold should be slightly higher than P15.33. For models without the boost module, the switching voltage point is set by the external voltage detection circuit. For models with the boost module, the switching voltage is 100.0V. Setting range: P15.33–400.0V (0.0: invalid)	100.0V

6.12.5 Hybrid power supply function

SP100 series AC/DC models without BOOST modules support simultaneous AC/DC access for hybrid power supply. First, set the panel configuration Vmp value to a value that exceeds the standard bus voltage, and then set P15.32=1 to achieve the hybrid power supply function. When there is AC connection, the output frequency of the solar pump is the rated frequency of the pump. When there is only DC connection, the output frequency is calculated by MPPT controller in real time.

Function code	Name	Description	Default
P15.32	Selection between PV input and power frequency input	If P15.32 is set to 0, the system switches between PV input and power frequency input according to the detected PV voltage and switching threshold. If P15.32 is set to 1, the system switches to power frequency input when it detects successful AC power connection; otherwise, it switches to PV input. If P15.32 is set to 2, the system forcibly switches to PV input. Setting range: 0–2 0: Automatic mode	2

Function code	Name	Description	Default
		1: Hybrid power supply mode 2: PV input mode **Note:** This parameter is invalid when terminal input function 42 is valid.	

6.12.6 Flow calculation function

By fitting the flow characteristic curve with the five-point PQ value, the instantaneous flow of the solar pump is calculated through the output power. Typical method for obtaining 5-point PQ value:

- Set P05.00=0 to disable the solar dedicated function.
- Set P00.10=20%*Rated frequency to run the solar pump.
- Read the value of P18.08 to obtain P1.
- Read the present Q1 from the flow meter.
- Set P00.10=40%*Rated frequency to run the solar pump.
- Read the value of P18.08 to obtain P2.
- Read the present Q2 from the flow meter.
- Set the value of P00.10 from lower to higher, and so on in a similar manner.
- Set P00.10=100%*Rated frequency to run the solar pump.
- Read the value of P18.08 to obtain P5.
- Read the present Q5 from the flow meter.

It should be noted that when the solar pump is only connected with the solar panel, the setting of P00.10 for the fifth time should be set according to the light intensity at that time. If this value is too large, undervoltage fault may occur.

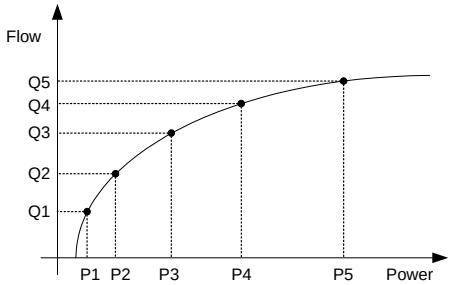

Function code	Name	Description	Default
P15.40	Enable PQ curve fitting	When P15.40=1, the flow calculation uses the point between P15.41 and P15.50 for PQ	0

Function code	Name	Description	Default
		curve fitting calculation, which is more accurate. Setting range: 0–1 0: Invalid 1: Enable	
P15.41	PQ curve power point 1	Corresponding power point when the input power of water pump is at the first point of PQ curve. Setting range: 0.0–1000.0kW	0.0kW
P15.42	PQ curve power point 2	Corresponding power point when the input power of water pump is at the second point of PQ curve. Setting range: 0.0–1000.0kW	0.0kW
P15.43	PQ curve power point 3	Corresponding power point when the input power of water pump is at the third point of PQ curve. Setting range: 0.0–1000.0kW	0.0kW
P15.44	PQ curve power point 4	Corresponding power point when the input power of water pump is at the fourth point of PQ curve. Setting range: 0.0–1000.0kW	0.0kW
P15.45	PQ curve power point 5	Corresponding power point when the input power of water pump is at the fifth point of PQ curve. Setting range: 0.0–1000.0kW	0.0kW
P15.46	PQ curve flow point 1	Corresponding flow point when the flow of water pump is at the first point of PQ curve. Setting range: 0.0–1000.0m^3/ h	0.0m^3/h
P15.47	PQ curve flow point 2	Corresponding flow point when the flow of water pump is at the second point of PQ curve. Setting range: 0.0–1000.0m^3/ h	0.0m^3/h
P15.48	PQ curve flow point 3	Corresponding flow point when the flow of water pump is at the third point of PQ curve. Setting range: 0.0–1000.0m^3/ h	0.0m^3/h
P15.49	PQ curve flow point 4	Corresponding flow point when the flow of water pump is at the fourth point of PQ	0.0m^3/h

Function code	Name	Description	Default
		curve. Setting range: 0.0–1000.0m³/ h	
P15.50	PQ curve flow point 5	Corresponding flow point when the flow of water pump is at the fifth point of PQ curve. Setting range: 0.0–1000.0m³/ h	0.0m³/h
P15.51	Water pump efficiency	Setting range: 0–100% (overall efficiency of water pump)	80%

6.12.7 Timing start/stop function

When P15.52 is set to a non-zero value, the LCD keypad will use this value as the local time for calibration.

When P15.53 and P15.54 are set to non-zero values, the timing start/stop function is enabled. When the local time exceeds the value of P15.53, a start command is released automatically. When the local time exceeds the value of P15.54, a stop command is released automatically. When the solar pump is faulty, a reset command is delivered first, and then a control command is released after 20s.

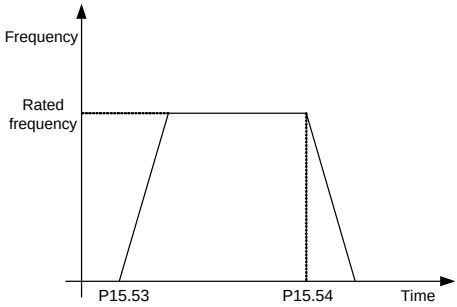

Function code	Name	Description	Default
P15.52	Local time	0.00–23.59	0.00
P15.53	Timing startup time	0.00–P15.54	0.00
P15.54	Timing stop time	P15.53–23.59	0.00

6.12.8 Single-phase motor function

SP100 supports the single-phase motor driving by setting P15.39=0. The single-phase motor has two driving modes: single-phase control and two-phase control. The default is

single-phase control.

In general, the output U and W of the inverter are connected to the phase line of single-phase motor as follows:

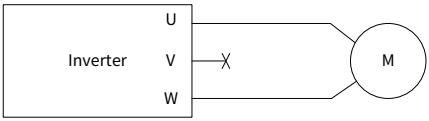

If the single-phase water pump can not be started, two-phase control mode shall be adopted. The starting capacitor and operating capacitor (if any) of the motor shall be removed. The internal wiring diagram of common single-phase motor is as follows: L1 indicates operating winding, L2 indicates starting winding, C1 indicates operating capacitor and C2 indicates starting electric capacity. When the rotating speed of the motor exceeds 75% of the rated rotating speed, the starting capacitor shall be disconnected through the centrifugal switch.

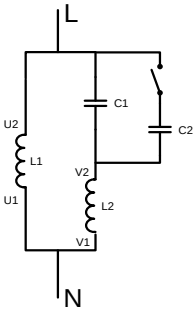

The internal wiring diagram of single-phase motor winding is as follows after removing the starting capacitor and operating capacitor:

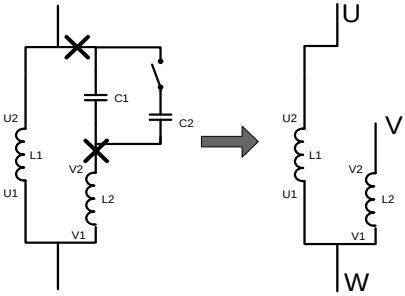

Two-phase control wiring shall strictly align with UVW, and common methods for determining main and auxiliary windings are as follows:

Use a multimeter to measure the resistance value between two windings. The resistance value of the main winding (operating winding) is smaller than the resistance value of the auxiliary winding (starting winding).

There are two ways to adjust the rotation direction of the water pump:

- Set P00.13= 1;
- Set P04.34=0x01.

7 Communication

7.1 Standard communication interface

The inverter provides RS485 communication as a standard function. The following table lists the communication interfaces and terminals.

Table 7-1 Standard communication terminals

Interface	Network signal	Signal description	Description
XH connector	485+ 485-	RS485 communication	Terminal for external RS485 communication, supporting the Modbus communication protocol

7.2 Communication data address

The communication data includes inverter-related function parameter data, inverter status parameter data, and inverter control parameter data.

7.2.1 Function parameter address

The address of a function code consists of two bytes, with the MSB on the left and LSB on the right. Both the MSB and LSB also range from 00–FFH. The MSB is the hexadecimal form of the group number on the left of the dot mark, and LSB is that of the number on the right of the dot mark. Take P05.06 as an example: The group number is 05, that is, the MSB of the parameter address is the hexadecimal form of 05; and the number behind the dot mark is 06, that is, the LSB is the hexadecimal form of 05. Therefore, the function code address is 0506H in the hexadecimal form. For P10.01, the parameter address is 0A01H.

Note:

- The parameters in the P29 group are set by the manufacturer and cannot be read or modified. Some parameters cannot be modified when the inverter is running; some cannot be modified regardless of the inverter status. Pay attention to the setting range, unit, and description of a parameter when modifying it.
- Frequently writing to EEPROM will reduce its life time. Some function codes do not need to be stored during communication. The application requirements can be met by modifying the value of the on-chip RAM, that is, modifying the highest-order bit of the corresponding function code address from 0 to 1. For example, the function code P00.07 does not need to be stored into EEPROM. Only by changing the value in RAM

can set the address to 8007H. The address can be used only for writing data to the on-chip RAM, and it is invalid when used for reading data.

7.2.2 Non-function parameter address

In addition to modifying the parameters of the inverter, the master can also control the inverter, such as starting and stopping it, and monitoring the operation status of the inverter. The following describes status parameter data addresses and control parameter data addresses.

1. Status parameters

Note: Inverter status parameters are read only.

Parameter	Address	Description
Inverter status word 1	2100H	0001H: Forward running
		0002H: Reverse running
		0003H: Stopped
		0004H: Inverter in fault
		0005H: POFF
		0006H: Pre-exciting
Inverter status word 2	2101H	Bit0: =0: Not ready to run =1: Ready to run Bit2–bit1: =00: Motor 1 Bit3: =0: AM =1: SM Bit4: =0: No pre-alarm upon overload =1: Overload pre-alarm Bit6–bit5=00: Keypad-based control =01: Terminal-based control =10: Communication-based control
Inverter fault code	2102H	See the description of fault types for details.
Inverter identification code	2103H	0x0194
Solar pump special character 1	2104H	'I'
Solar pump special character 2	2105H	'N'
Solar pump special character 3	2106H	'V'
Solar pump special character 4	2107H	'T'
Procedure and state of parameter autotuning	2108H	Bit0–bit3: Present step Bit4–bit7: Total step number Bit8–bit11: Autotuning not completed

Parameter	Address	Description
		Bit12–bit15: Autotuning completed
User password state	2109H	User password
Prompt page	210AH	0: No prompt 1: -FAF- (Forced AC mode Failed)
Running frequency	3000H	0–Fmax (Unit: 0.01Hz)
Set frequency	3001H	0–Fmax (Unit: 0.01Hz)
Bus voltage	3002H	0.0–2000.0V (Unit: 0.1V)
Output voltage	3003H	0–1200V (Unit: 1V)
Output current	3004H	0.0–3000.0A (Unit: 0.1A)
Rotational speed	3005H	0–65535 (Unit: 1RPM)
Output power	3006H	-300.0–300.0% (Unit: 0.1%)
Output torque	3007H	-250.0–250.0% (Unit: 0.1%)
Closed-loop setting	3008H	-100.0–100.0% (Unit: 0.1%)
Closed-loop feedback	3009H	-100.0–100.0% (Unit: 0.1%)
Input IO state	300AH	0x00–0x3F, corresponding to the local HDIB, HDIA, S4, S3, S2, S1
Output IO status	300BH	0x00–0x0F, corresponding to the local RO2, RO1, HDO, Y1
Analog input 1	300CH	0.00–10.00V (Unit: 0.01V)
Analog input 2	300DH	0.00–10.00V (Unit: 0.01V)
Inverter identification code	3016H	-
Fault code	5000H	-

2. Control parameter

Note: Inverter control parameters can be read and written.

Parameter	Address	Description
Communication-based control command	2000H	0001H: Run forward
		0002H: Run reversely
		0003H: Jog forward
		0004H: Jog reversely
		0005H: Stop
		0006H: Coast to stop
		0007H: Fault reset
		0008H: Jogging stop
Communication-based setting address	2001H	Communication-based frequency setting (0–Fmax, unit: 0.01Hz)
	2002H	PID reference (0–1000, in which 1000 corresponds to 100.0%)
	2003H	PID feedback (0–1000, in which 1000 corresponds to 100.0%)

Parameter	Address	Description
Communication-based setting address	2004H	Torque setting (-3000–3000, in which 1000 corresponds to 100.0% of the motor rated current)
	2005H	Upper limit setting of forward running frequency (0–Fmax; unit: 0.01Hz)
	2006H	Upper limit setting of reverse running frequency (0–Fmax; unit: 0.01Hz)
	2007H	Upper limit of the electromotive torque (0–3000, in which 1000 corresponds to 100.0% of the motor rated current)
	2008H	Braking torque upper limit (0–3000, in which 1000 corresponds to 100.0% of the motor rated current)
	2009H	Special control command word Bit1–0: =00: Motor 1 =01: Motor 2 Bit2: =1: Enable speed/torque control switchover =0: Disable speed/torque control switchover Bit3: =1: Clear electricity consumption data =0: Keep electricity consumption data Bit4: =1: Enable pre-excitation =0: Disable pre-excitation Bit5: =1: Enable DC braking =0: Disable DC braking
	200AH	Virtual input terminal command (0x000–0x3FF) Corresponds to S8, S7, S6, S5, HDIB, HDIA, S4, S3, S2, S1
	200BH	Virtual output terminal command, range: 0x00–0x0F Corresponds to the local RO2, RO1, HDO, Y1
	200DH	Voltage setting (used when V/F separation is implemented) 0–1000, in which 1000 corresponds to 100.0% of the motor rated voltage
	200EH	AO setting 1 (-1000–+1000, in which 1000 corresponding to 100.0%)
	200FH	AO setting 2 (-1000–+1000, in which 1000 corresponding to 100.0%)
	2010H	Anti-counterfeiting setting
	2011H	Bar code setting
	2012H	Remote upgrade jumping command
	2013H	Run command channel communication setting. This register is valid when P07.02=6.

Note: Some parameters in the preceding table are valid only after they are enabled. Take the running and stop operations as examples, you need to set "Channel of running commands" (P00.01) to "Communication".

The following table describes the encoding rules of device codes (corresponding to the identification code 2103H of the inverter).

8 MSBs	Meaning	8 LSBs	Meaning
0x01	Goodrive	0x94	SP100 series solar pump inverter

7.3 Modbus networking

A Modbus network is a control network with one master and multiple slaves, that is, on one Modbus network, there is only one device serving as the master, and other devices are the slaves. The master can communicate with any single slave or with all slaves. For separate access commands, a slave needs to return a response. For broadcasted information, slaves do not need to return responses. Generally, the PC, industry control device, or programmable logic controller (PLC) functions as the master, while inverters function as slaves.

7.3.1 Network topology

Application to one inverter

Figure 7-1 Application to one inverter

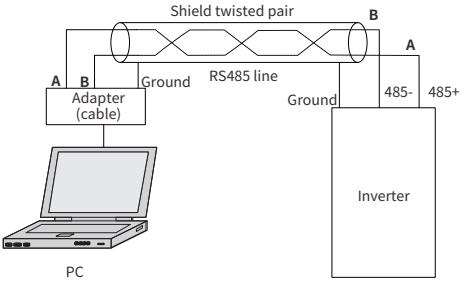

Application to multiple inverters

In practical application to multiple inverters, the daisy chain connection and star connection are commonly used.

Figure 7-2 Practical daisy chain connection application

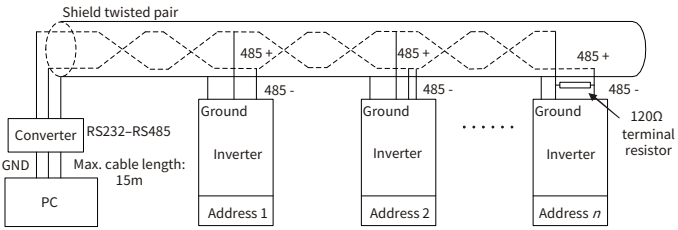

Figure 7-3 shows the star connection. When this connection mode is adopted, the two devices that are farthest away from each other on the line must be connected with a terminal resistor (the two devices are devices #1 and #15).

Figure 7-3 Star connection

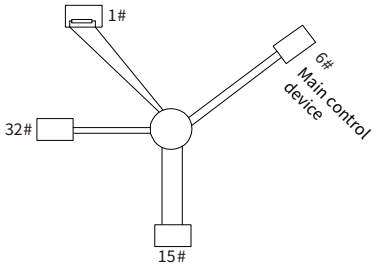

Use shielded cables, if possible, in multi-device connection. The baud rates, data bit check settings, and other basic parameters of all the devices on the RS485 line must be set consistently, and addresses cannot be duplicated.

7.3.2 RTU mode

7.3.2.1 RTU communication frame structure

When a controller is set to use the RTU communication mode on a Modbus network, every byte (including 8 bits) in the message includes 2 hexadecimal characters (each includes 4 bits). Compared with the ASCII mode, the RTU mode achieves transmission of more data at the same baud rate.

In RTU mode, the transmission of a new frame always starts from an idle time (the transmission time of 3.5 bytes). On a network where the transmission rate is calculated based on the baud rate, the transmission time of 3.5 bytes can be easily obtained. After the idle time ends, the data domains are transmitted in the following sequence: slave address, command code, data, and CRC check character. Each byte transmitted in each domain includes 2 hexadecimal characters (0–9, A–F). The network devices always monitor the communication bus. After receiving the first domain (address information), each network device identifies the byte. After the last byte is sent, a similar transmission interval (with a minimum transmission time of 3.5 bytes) is used to indicate that the frame transmission ends. Then, the transmission of a new frame starts.

RTU data frame format

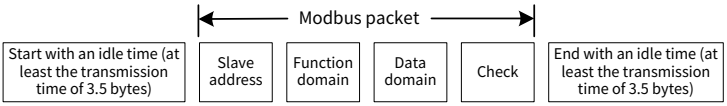

The information of a frame must be transmitted in a continuous data flow. If there is an interval greater than the transmission time of 1.5 bytes before the transmission of the entire frame is complete, the receiving device deletes the incomplete information, and mistakes the subsequent byte for the address domain of a new frame. Similarly, if the transmission interval between two frames is shorter than the transmission time of 3.5 bytes, the receiving device mistakes it for the data of the last frame. The CRC check value is incorrect due to the disorder of the frames, and thus a communication fault occurs.

If the slave detects a communication fault or read/write failure due to another cause, an error frame is replied.

RTU data frame format

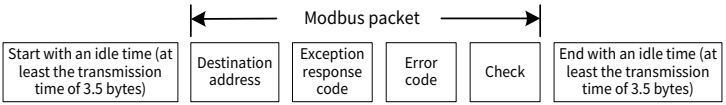

The following table describes the standard structure of an RTU frame.

START (frame header)	T1-T2-T3-T4 (time gap with a min. length of 3.5 bytes)
ADDR (slave address domain)	Communication address: 0–247 (decimal system; 0 is the broadcast address)
CMD (function domain)	03H: Read slave parameter; 06H: Write slave parameter
Data domain DATA (N-1)...DATA (0)	Data of 2*N bytes Main content of the communication as well as the core of data exchanging
CRC CHK LSB	Detection value: CRC verification value (16 bits)
CRC CHK MSB	
END (frame tail)	T1-T2-T3-T4 (time gap with a min. length of 3.5 bytes)

7.3.2.2 RTU communication frame error check methods

During the transmission of data, errors may occur due to various factors. Without error check, the data receiving device cannot identify data errors and may make an incorrect response. The incorrect response may cause severe problems. Therefore, the data must be checked.

The error check of a frame includes two parts, namely, bit check on individual bytes (that is, odd/even check using the check bit in the character frame), and whole data check (CRC check).

7.3.2.3 Bit check on individual bytes (odd/even check)

You can select the bit check mode as required, or you can choose not to perform the check, which will affect the check bit setting of each byte.

Definition of even check: Before the data is transmitted, an even check bit is added to indicate whether the number of "1" in the to-be-transmitted data is odd or even. If it is even, the check bit is set to "0, and if it is odd, the check bit is set to "1".

Definition of odd check: Before the data is transmitted, an odd check bit is added to indicate whether the number of "1" in the to-be-transmitted data is odd or even. If it is odd, the check bit is set to "0"; and if it is even, the check bit is set to "1".

For example, the data bits to be sent are "11001110", including five "1". If the even check is applied, the even check bit is set to "1"; and if the odd check is applied, the odd check bit is set to "0". During the transmission of the data, the odd/even check bit is calculated and placed in the check bit of the frame. The receiving device performs the odd/even check after receiving the data. If it finds that the odd/even parity of the data is inconsistent with the preset information, it determines that a communication error occurs.

7.3.2.4 Cyclic redundancy check (CRC)

A frame in the RTU format includes an error detection domain based on the CRC calculation. The CRC domain checks all the content of the frame. The CRC domain consists of two bytes, including 16 binary bits. It is calculated by the transmitter and added to the frame. The receiver calculates the CRC of the received frame, and compares the result with the value in the received CRC domain. If the two CRC values are not equal to each other, errors occur in the transmission.

During CRC, 0xFFFF is stored first, and then a process is invoked to process a minimum of 6 contiguous bytes in the frame based on the content in the current register. CRC is valid only for the 8-bit data in each character. It is invalid for the start, stop, and parity bits.

During the generation of the CRC values, the "exclusive or" (XOR) operation is performed on the each 8-bit character and the content in the register. The result is placed in the bits from the least significant bit (LSB) to the most significant bit (MSB), and 0 is placed in the MSB. Then, LSB is detected. If LSB is 1, the XOR operation is performed on the current value in the register and the preset value. If LSB is 0, no operation is performed. This process is repeated for 8 times. After the last bit (8th bit) is detected and processed, the XOR operation is performed on the next 8-bit byte and the current content in the register. The final values in the register are the CRC values obtained after operations are performed on all the bytes in the frame.

The calculation adopts the international standard CRC check rule. You can refer to the related standard CRC algorithm to compile the CRC calculation program as required.

The following is a simple CRC calculation function for your reference (using the C programming language):

```
unsigned int crc_cal_value (unsigned char*data_value,unsigned char
```

```
data_length)
{
    int i;
    unsigned int crc_value=0xffff;
    while (data_length--)
    {
        crc_value^=*data_value++;
        for (i=0;i<8;i++)
        {
            if (crc_value&0x0001)
                crc_value= (crc_value>>1) ^0xa001;
            else
                crc_value=crc_value>>1;
        }
    }
    return (crc_value) ;
}
```

In the ladder logic, CKSM uses the table look-up method to calculate the CRC value according to the content in the frame. The program of this method is simple, and the calculation is fast, but the ROM space occupied is large. Use this program with caution in scenarios where there are space occupation requirements on programs.

7.3.3 RTU command code

7.3.3.1 Command code 03H, reading *N* words (continuously up to 16 words)

The command code 03H is used by the master to read data from the inverter. The count of data to be read depends on the "data count" in the command. A maximum of 16 pieces of data can be read. The addresses of the read parameters must be contiguous. Each piece of data occupies 2 bytes, that is, one word. The command format is presented using the hexadecimal system (a number followed by "H" indicates a hexadecimal value). One hexadecimal value occupies one byte.

The 03H command is used to read information including the parameters and running status of the inverter.

For example, if the master reads two contiguous pieces of data (that is, to read content from the data addresses 0004 H and 0005 H) from the inverter whose address is 01H, the command frame structure is described in the following.

RTU master command (from the master to the inverter)

START	T1-T2-T3-T4 (transmission time of 3.5 bytes)
ADDR (address)	01H

CMD (command code)	03H
Start address MSB	00H
Start address LSB	04H
Data count MSB	00H
Data count LSB	02H
CRC LSB	85H
CRC MSB	CAH
END	T1-T2-T3-T4 (transmission time of 3.5 bytes)

"T1-T2-T3-T4 (transmission time of 3.5 bytes)" in "START" and "END" indicates that the RS485 communication needs to be idle for at least the transmission time of 3.5 bytes. An idle time is required to distinguish on message from another to ensure that the two messages are not regarded as one.

"ADDR" is "01H", indicating that the command is sent to the inverter whose address is 01H. "ADDR" occupies one byte.

"CMD" is "03H", indicating that the command is used to read data from the inverter. "CMD" occupies one byte.

"Start address" indicates the address from which data is read. "Start address" occupies two bytes, with the MSB on the left and LSB on the right.

"Data count" indicates the count of data to be read (unit: word). "Start address" is "0004H" and "Data count" is "0002H", which indicates reading data from the addresses 0004H and 0005H.

CRC check occupies two bytes, with the LSB on the left, and MSB on the right.

RTU slave response (from the inverter to the master)

START	T1-T2-T3-T4 (transmission time of 3.5 bytes)
ADDR	01H
CMD	03H
Number of bytes	04H
MSB of data in 0004H	13H
LSB of data in 0004H	88H
MSB of data in 0005H	00H
LSB of data in 0005H	00H
CRC LSB	7EH
CRC MSB	9DH
END	T1-T2-T3-T4 (transmission time of 3.5 bytes)

The definition of the response information is described as follows:

"ADDR" is "01H", indicating that the command is sent from the inverter whose address is 01H. "ADDR" occupies one byte.

"CMD" is "03H", indicating that the message is an inverter response to the 03H command from the master for reading data. "CMD" occupies one byte.

"Number of bytes" indicates the number of bytes between the byte (not included) and the CRC byte (not included). The value "04" indicates that there are four bytes of data between "Number of bytes" and "CRC LSB", that is, "MSB of data in 0004H", "LSB of data in 0004H", "MSB of data in 0005H", and "LSB of data in 0005H".

A record of data contains two bytes, with the MSB on the left and LSB on the right. From the response, the data in 0004H is 1388H, and that in 0005H is 0000H.

CRC check occupies two bytes, with the LSB on the left, and MSB on the right.

7.3.3.2 Command code 06H, writing a word

This command is used by the master to write data to the inverter. One command can be used to write only one piece of data. It is used to modify the parameters and running mode of the inverter.

For example, if the master writes 5000 (1388H) to 0004H of the inverter whose address is 02H, RTU master command (from the master to the inverter)

START	T1-T2-T3-T4 (transmission time of 3.5 bytes)
ADDR	02H
CMD	06H
MSB of data writing address	00H
LSB of data writing address	04H
MSB of data content	13H
LSB of data content	88H
CRC LSB	C5H
CRC MSB	6EH
END	T1-T2-T3-T4 (transmission time of 3.5 bytes)

RTU slave response (from the inverter to the master)

START	T1-T2-T3-T4 (transmission time of 3.5 bytes)
ADDR	02H
CMD	06H
MSB of data writing address	00H
LSB of data writing address	04H
MSB of data content	13H
LSB of data content	88H

CRC LSB	C5H
CRC MSB	6EH
END	T1-T2-T3-T4 (transmission time of 3.5 bytes)

7.3.3.3 Command code 10H, continuous writing

The command code 10H is used by the master to write data to the inverter. The quantity of data to be written is determined by "Data quantity", and a maximum of 16 pieces of data can be written.

For example: Writing 5000 (1388H) and 50 (0032H) to 0004H and 0005H of the inverter (as the slave) whose address is 02H.

RTU master command (from the master to the inverter)

START	T1-T2-T3-T4 (transmission time of 3.5 bytes)
ADDR	02H
CMD	10H
MSB of data writing address	00H
LSB of data writing address	04H
Data count MSB	00H
Data count LSB	02H
Number of bytes	04H
MSB of data to be written to 0004H	13H
LSB of data to be written to 0004H	88H
MSB of data to be written to 0005H	00H
LSB of data to be written to 0005H	32H
CRC LSB	C5H
CRC MSB	6EH
END	T1-T2-T3-T4 (transmission time of 3.5 bytes)

RTU slave response (from the inverter to the master)

START	T1-T2-T3-T4 (transmission time of 3.5 bytes)
ADDR	02H
CMD	10H
MSB of data writing address	00H
LSB of data writing address	04H
Data count MSB	00H
Data count LSB	02H
CRC LSB	C5H
CRC MSB	6EH
END	T1-T2-T3-T4 (transmission time of 3.5 bytes)

7.3.4 Fieldbus scale

In practical applications, communication data is represented in the hexadecimal form, but hexadecimal values cannot represent decimals. You can multiply a non-integer by a multiple to obtain an integer, in which the multiple is considered as a fieldbus scale.

The fieldbus scale depends on the number of decimal places in the value specified in "Setting range" or "Default". If there are n (for example, 1) decimal places in the value, the fieldbus scale m (then m=10) is the result of 10 to the power of n.

For example, the value specified in "Setting range" or "Default" contains one decimal place, and therefore the fieldbus scale is 10. If the value received by the master is 50, "Delay of auto fault reset" of the inverter is 5.0 (5.0=50/10).

To set "Wake-up-from-sleep delay" to 5.0s through Modbus communication, you need first to multiply 5.0 by 10 according to the scale to obtain an integer 50, that is, 32H in the hexadecimal form, and then send the following write command:

01	06	01 14	00 32	49 E7
Inverter address	Write command	Parameters address	Parameters data	CRC

After receiving the command, the inverter converts 50 into 5.0 based on the fieldbus scale, and then sets "Wake-up-from-sleep delay" to 5.0s.

For another example, after sending the "Wake-up-from-sleep delay" parameter read command, the master receives the following response from the inverter:

01	03	02	00 32	39 91
Inverter address	Read command	2-byte data	Parameter data	CRC

The parameter data is 0032H, that is, 50, and therefore 5.0 is obtained based on the fieldbus scale (50/10=5.0). In this case, the master identifies that "Wake-up-from-sleep delay" is 5.0s.

7.3.5 Error message response

Error message responses are sent from the inverter to the master. The following table lists the codes and definitions of the error message responses.

Code	Name	Meaning
01H	Invalid command	The command code received by the upper computer is not allowed to be executed. The possible causes are as follows: • The function code is applicable only on new devices and is not implemented on this device. • The slave is in the faulty state when processing this request.
02H	Invalid data	For the inverter, the data address in the request of the upper

Code	Name	Meaning
	address	computer is not allowed. In particular, the combination of the register address and the number of the to-be-sent bytes is invalid.
03H	Invalid data value	The received data domain contains a value that is not allowed. The value indicates the error of the remaining structure in the combined request. **Note:** It does not mean that the data item submitted for storage in the register includes a value unexpected by the program.
04H	Operation failure	The parameter setting is invalid in the write operation. For example, a function input terminal cannot be set repeatedly.
05H	Incorrect password	The password entered in the password verification address is different from that is specified by P07.00.
06H	Incorrect data frame	The data frame sent from the host controller is incorrect in the length, or in the RTU format, the value of the CRC check bit is inconsistent with the CRC value calculated by the lower computer.
07H	Parameter read-only	The parameter to be modified in the write operation of the host controller is a read-only parameter.
08H	Parameter cannot be modified in running	The parameter to be modified in the write operation of the host controller cannot be modified during the running of the inverter.
09H	Password protection	If the host controller does not provide the correct password to unlock the system to perform a read or write operation, the error of “system being locked” is reported.

7.3.6 Communication commissioning

In the following example, a PC is used as the master, an RS232-RS485 converter is used for signal conversion, and the PC serial port used by the converter is COM1 (an RS232 port). The host controller commissioning software is the serial port commissioning assistant Commix1.4, which can be downloaded from the Internet. Download a version that can automatically execute the CRC check function. The following figure shows the interface of Commix.

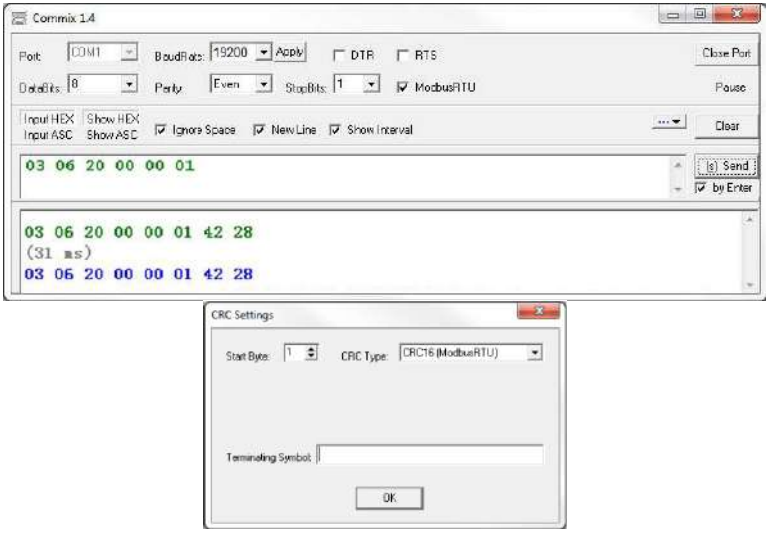

Set **Port** to **COM1**. Set **BaudRate** consistently with P14.01. **DataBits**, **Parity**, and **StopBits** must be set consistently with P14.02. If the RTU mode is selected, choose **Input HEX** and **Show HEX**. To implement automatic CRC, you need to choose **Modbus RTU** and set **Start Byte** to **1** and **CRC Type** to **CRC16 (Modbus RTU)** in the **CRC Settings** window. After the automatic CRC is enabled, do not enter CRC in commands. Otherwise, command errors may occur due to repeated CRC.

The commissioning command for setting the inverter whose address is 03H to run forward is as follows:

03	06	20 00	00 01	42 28
Inverter address	Write command	Parameter address	Forward running	CRC

Note:

- The inverter address (P14.00) must be set to 03.
- Set the channel of running commands (P00.01) to 2 (Communication).
- Click **Send**. If the line configuration and settings are correct, a response transmitted from the inverter is received.

03	06	20 00	00 01	42 28
Inverter address	Write command	Parameter address	Forward running	CRC

8 Fault handling

8.1 Fault indication and reset

When the FAULT indicator is on, the inverter is in abnormal state, with the keypad showing the fault code. For details about fault causes and solutions, see section 8.2 Faults and solutions. If the fault cause cannot be located, contact our local office for technical support. There are three methods to reset inverter faults:

Method 1 Press the key on the keypad.

Method 2 Set the corresponding parameter in P05.02– P05.03 to 7.

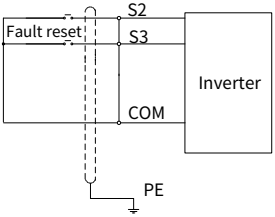

Method 3 Cut off the inverter power supply.

8.2 Faults and solutions

When a fault occurred, handle the fault as follows:

Step 1 Check whether the keypad display is improper. If yes, contact the local INVT office.

Step 2 If no, check the function codes in P07 group to determine the real state when the fault occurred.

Step 3 Check the following table for the exception and solution.

Step 4 Rule out the faults or ask for help from professionals.

Step 5 After confirming the fault is removed, perform fault reset, and start running.

8.2.1 Common faults and solutions

New fault code	Old fault code	Fault type	Possible cause	Solution
E1	OUt1	Inverter unit U-phase protection	●ACC/DEC is too fast. ●IGBT module is damaged ●Misoperation caused by interference. ●Drive wires are poorly connected. ●To-ground short circuit occurred. ●Sparks occurred inside due to poor use environment conditions	●Increase ACC/DEC time. ●Change the inverter unit. ●The device and system has been grounded reliably. ●Check that the drive wires properly. ●Check the motor wiring and ensure that there is no short circuit between the motor and ground ●Remove the dust or oil stain inside the inverter regularly
E2	OUt2	Inverter unit V-phase protection		
E3	OUt3	Inverter unit W-phase protection		
E4	OC1	Overcurrent during acceleration	●ACC/DEC is too fast. ●Grid voltage is too low. ●Inverter power is too small. ●Load transient or exception occurred. ●3PH output current imbalance ●Strong external interference sources (contactor switchover or improper grounding)	●Increase ACC/DEC time. ●Increase grid input voltage. ●Select an inverter with larger power. ●Check for motor stalling, short connection, and load device exceptions. ●Check that the inverter 3PH output voltage is normal and that the motor 3PH resistance is balanced, and there is no output phase loss ●Check that there is no strong interference (whether motor cable is far away from contactor and system is grounded reliably).
E5	OC2	Overcurrent during deceleration		
E6	OC3	Overcurrent during constant speed running		
E7	OV1	Overvoltage during acceleration	●ACC/DEC time is too short. ●Abnormal input voltage. ●Start during motor rotating.	●Increase ACC/DEC time. ●Check the input voltage. ●
E8	OV2	Overvoltage during deceleration		

New fault code	Old fault code	Fault type	Possible cause	Solution
E9	OV3	Overvoltage during constant speed running	●Load energy regeneration is too large.	
E10	UV	DC bus undervoltage	●Grid voltage is too low.	●Check the grid input power.
E11	OL1	Motor overload	●Grid voltage is too low. ●Motor rated current is set incorrectly. ●Motor stall or load jumps violently.	●Increase grid input voltage. ●Reset the motor rated current in the motor parameter group. ●Check the load and adjust torque boost.
E12	OL2	Inverter overload	●ACC is too fast ●The motor in rotating is restarted ●The grid voltage is too low ●Load is too heavy. ●Inverter power is too small.	●Increase acceleration time. ●Avoid restarting after stop ●Increase grid input voltage ●Select an inverter with larger power.
E13	SPI	Phase loss on input side	●Phase loss or violent fluctuation occurred on inputs L1, L2, L3 ●The screws on the input side are loose.	●Check that the input power is normal and the input cable connection is not loose. ●Set P11.00 to screen out the fault.
E14	SPO	Phase loss on output side	●Output cables are broken or short connected to the ground. ●UVW phase loss (or the three phases of load are seriously asymmetrical).	●Check for loose or broken output cables. ●Check for sharp load fluctuation and motor 3PH resistance imbalance.
E16	OH2	Inverter module overheat	●Air duct is blocked or fan is damaged. ●Ambient temperature is too high.	●Ventilate the air duct or replace the fan. ●Keep good ventilation to lower ambient temperature.

New fault code	Old fault code	Fault type	Possible cause	Solution
			●Long-time overload running.	●Select an inverter with larger power.
E17	EF	External fault	●The terminal is set to external fault function and the function is triggered.	●Check the terminal settings and the closure of external switches.
E18	CE	RS485 communication fault	●External device communication is disconnected.	●Check if the external connected devices have lost communication or if the communication timeout is set improperly.
E19	ItE	Current detection fault	●Abnormal motor cable or motor insulation. ●Hall cable is in poor contact. ●Hall component or current sampling optocoupler damaged.	●Remove motor cables to check. ●Check the Hall cable connector. ●Contact the manufacturer.
E20	tE	Motor-autotuning fault	●Motor capacity does not match with the inverter capacity. This fault may occur if the capacity difference exceeds five power classes. ●Incorrect motor parameter setting. ●The parameters gained from autotuning deviate sharply from the standard parameters. ●Autotuning timeout. ●Pulse current setting is too large.	●Change the inverter model, or adopt the V/F mode for control. ●Check motor wiring, motor type, and parameter settings. ●Empty the motor load and re-perform autotuning. ●Check whether the upper limit frequency is larger than 2/3 of the rated frequency. ●Decrease the pulse current setting properly.

New fault code	Old fault code	Fault type	Possible cause	Solution
E21	EEP	EEPROM operation fault	●Error in reading or writing control parameters ●EEPROM is damaged.	●Press the STOP/ RST key to reset. ●Replace the main control board.
E22	PIDE	PID feedback offline	●PID feedback is disconnected. ●PID feedback source disappears.	●Check PID feedback signal wires. ●Check PID feedback source.
E25	OL3	Electrical overload	●The inverter reports overload pre-alarm according to the setting.	●Check whether the overload pre-alarm point is set properly.
E32	ETH1	To-ground short-circuit fault	●The output of the inverter is short circuited to the ground. ●Current detection circuit is faulty. ●Actual motor power setup deviates sharply from the inverter power.	●Check whether the motor is short circuited to the ground and wiring is normal. ●Check whether the motor wiring is normal. ●Replace the hall component. ●Replace the main control board. ●Reset the motor parameters properly.
E34	dEu	Speed deviation fault	●The load is too heavy or stalled.	●Check for the load. If the load is normal, increase speed deviation detection time or prolong the ACC/DEC time. ●Check motor parameter settings and re-perform motor parameter autotuning. ●Check speed loop control parameter settings.
E36	LL	Underload fault	●The inverter reports underload pre-alarm according to the setting.	●Check the load and underload pre-alarm thresholds.
E96	E-PAO	No upgrade bootload	●The software does not have a	●Contact the manufacturer.

New fault code	Old fault code	Fault type	Possible cause	Solution
			bootloader.	
E536	tSF	Hydraulic probe is damaged.	•Hydraulic probe is damaged.	•Check the hydraulic probe feedback signal.
E576	LSE	Lightning strike fault	•Lightning strike	•Contact the manufacturer.

8.2.2 Other status

Alarm code	Status type	Possible cause	Solution
PoFF	System power failure	The system is powered off or the bus voltage is too low.	Check the grid conditions.
A9020	Weak-light alarm	Insufficient solar light.	Check the solar light condition.
A9021	Dry pumping alarm	No water in the well.	Check the submersion status of the water pump.
A9022	Full-water alarm	The water tank is full of water.	Check the water level of the tank.
A9023	Empty-water alarm	The water tank is empty.	Check the water level of the tank.
A9024	Mains power not connected alarm	The mains power is not connected successfully.	Check whether the mains power is connected normally.

8.3 Analysis on common faults

8.3.1 Weak-light pre-alarm

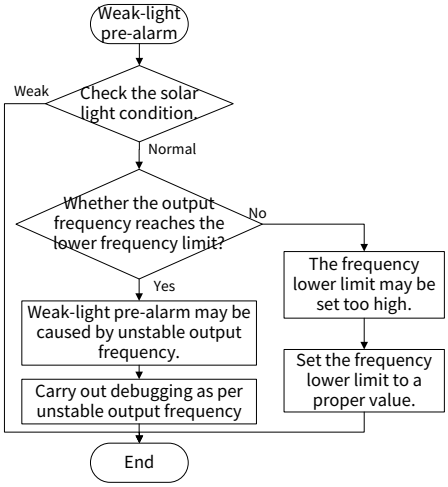

8.3.2 Unstable frequency

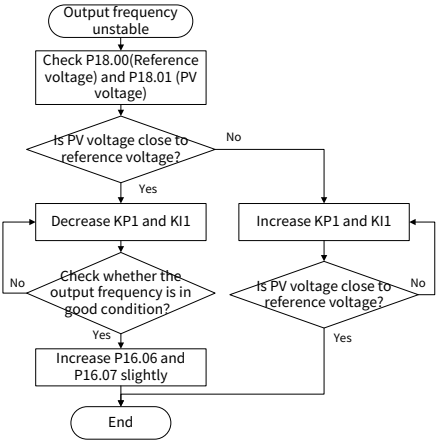

8.3.3 Inverter overheating

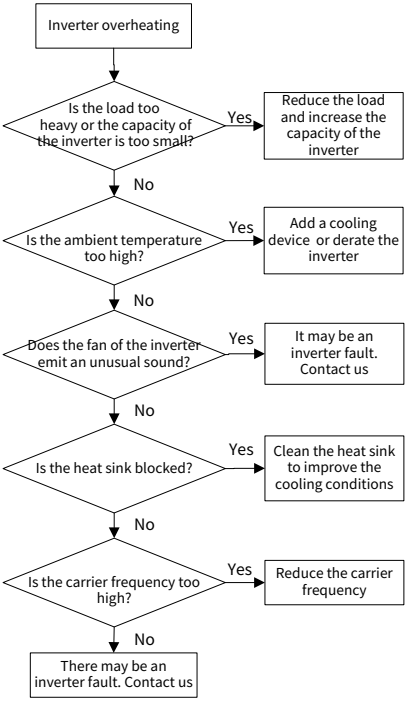

8.4 Countermeasures on common interference

8.4.1 Interference problems of meter switch and sensors

■ **Symptom and solution**

Symptom	Solution
The upper or lower limit is wrongly displayed, for example, 999 or -999.	• Check and ensure that the sensor feedback cable is 20cm or farther away from the motor cable. • Check and ensure that the ground wire of the motor is connected to the PE terminal of the inverter (if the ground wire of the motor has been connected to the ground block, you need to use a multimeter to measure and ensure that the resistance between the ground block and PE terminal is lower than 1.5 Ω). At the same time, you can short connect J10 at the inverter input end (or screw on the H10 screw).
The display of values jumps (usually occurring on pressure transmitters).	
The display of values is stable, but there is a large deviation, for example, the temperature is dozens of	

Symptom	Solution
degrees higher than the common temperature (usually occurring on thermocouples).	• Try to add a safety capacitor of 0.1μF to the signal end of the feedback signal terminal of the sensor. • Try to add a safety capacitor of 0.1μF to the power end of the sensor meter (pay attention to the voltage of the power supply and the voltage endurance of the capacitor). • The signal cable needs to use the shielded cable, and the shield layer must be grounded reliably to the PE or GND.
A signal collected by a sensor is not displayed but functions as a drive system running feedback signal.	

Note: When a decoupling capacitor is required, add it to the terminal of the device connected to the sensor. For example, if a thermocouple is to transmit signals of 0 to 20 mA to a temperature meter, the capacitor needs to be added on the terminal of the temperature meter; if an electronic ruler is to transmit signals of 0 to 30 V to a PLC signal terminal, the capacitor needs to be added on the terminal of the PLC.

8.4.2 Interference on RS485 communication

■ **Symptom and solution**

Symptom	Solution
Check whether the RS485 communication bus is disconnected or in poor contact.	• Arrange the communication cables and motor cables in different cable trays. • In multi-inverter application scenarios, adopt the chrysanthemum connection mode to connect the communication cables between inverters, which can improve the anti-interference capability. • In multi-inverter application scenarios, check and ensure that the driving capacity of the master is sufficient. • In the connection of multiple inverters, you need to configure one 120Ω terminal resistor on each end. • Check and ensure that the ground wire of the motor is connected to the PE terminal of the inverter (if the ground wire of the motor has been connected to the ground block, you need to use a multimeter to measure and ensure that the resistance between the ground block and PE terminal is lower than 1.5 Ω). At the same time, you can short connect J10 at the inverter input end (or screw on the H10 screw). • Do not connect the inverter and motor to the same ground terminal as the host controller (such as the PLC,
Check whether the two ends of line A or B are connected reversely.	
Check whether the communication protocol (such as the baud rate, data bits, and check bit) of the inverter is consistent with that of the host controller.	

Symptom	Solution
	HMI, and touch screen). It is recommended that you connect the inverter and motor to the power ground, and connect the host controller separately to a ground stud. ● Try to short the signal reference ground terminal (GND) of the inverter with that of the upper computer controller to ensure that ground potential of the communication chip on the control board of the inverter is consistent with that of the communication chip of the upper computer. ● Try to short GND of the inverter to its ground terminal (PE). ● Try to add a safety capacitor of 0.1μF at the power supply end of the host controller (PLC, HMI, or touch screen). Alternatively, use a magnet ring (Fe-based nanocrystalline magnet rings are recommended). Pass the L/N cable or +/- cable of the host controller power supply through the magnet ring in the same direction and wind around the magnet ring for 8 turns.

8.4.3 Failure to stop and indicator shimmering due to motor cable coupling

■ Symptom and solution

Symptom	Solution
Failure to stop In an inverter system where an DI terminal is used to control the start and stop, the motor cable and control cable are arranged in the same cable tray. After the system is started properly, the DI terminal cannot be used to stop the inverter.	● Check and ensure that the exception signal cable is arranged 20 cm or farther away from the motor cable. ● Add a safety capacitor of 0.1μF between the digital input terminal (DI) and the COM terminal. ● Connect the digital input terminal (DI) that controls the start and stop to other idle digital input terminals in parallel. For example, if DI1 is used to control the start and stop and DI4 is idle, you can try to short connect DI1 to DI4. ● Press STOP to stop the operation.
Indicator exceptions: After the inverter is started, the relay indicator, power distribution box indicator, PLC indicator, and indication buzzer shimmer, blink, or emit unusual sounds.	

Note: If the controller (such as PLC) in the system controls more than 5 inverters at the same time through digital input terminals (S), this scheme is not applicable.

8.4.4 Leakage current and interference on RCD

■ **Working principle**

Inverters output high-frequency PWM voltage to drive motors. In this process, the distributed capacitance between the internal IGBT of an inverter and the heat sink and that between the stator and rotor of a motor may inevitably cause the inverter to generate high-frequency leakage current to the ground. A residual current operated protective device (RCD) is used to detect the power-frequency leakage current when a grounding fault occurs on a circuit. The application of an inverter may cause misoperation of a RCD.

■ **Rules for selecting RCDs**

1. Inverter systems are special. In these systems, it is required that the rated residual current of common RCDs at all levels is larger than 200 mA, and the inverters are grounded reliably.
2. For RCDs, the time limit of an action needs to be longer than that of a next action, and the time difference between two actions need to be longer than 20ms. For example, 1s, 0.5s, and 0.2s.
3. For circuits in inverter systems, electromagnetic RCDs are recommended. Electromagnetic RCDs have strong anti-interference capability, and thus can prevent the impact of high-frequency leakage current.

Electronic RCD	Electromagnetic RCD
Low cost, high sensitivity, small in volume, susceptible to voltage fluctuation of the grid and ambient temperature, and weak anti-interference capability	Requiring highly sensitive, accurate, and stable zero-phase sequence current transformer, using permalloy high-permeability materials, complex process, high cost, not susceptible to voltage fluctuation of the power supply and ambient temperature, strong anti- interference capability

■ **Symptom and solution**

Symptom	Solution
RCD triggered upon inverter power-on	● Solution to mal-operation of RCD (on the part of inverter) ➢ Try to remove the jumper cap at "EMC/J10" from the middle casing of the inverter (or remove the H10 screw). ➢ Try to decrease the carrier frequency to 1.5kHz (P00.14=1.5). ➢ Try to modify the modulation method to "3PH modulation

Symptom	Solution
RCD triggered during inverter running	and 2PH modulation" (P08.40=00). ● Solution to mal-operation of RCD (on the part of system distribution) ➢ Check and ensure that the power cable is not soaking in water. ➢ Check and ensure that cables are not damaged or spliced. ➢ Check and ensure that no secondary grounding is performed on the neutral wire. ➢ Check and ensure that the main power cable terminal is in good contact with the air switch or contactor (all screws are tightened). ➢ Check 1PH powered devices, and ensure that no earth wires are used as neutral wires by these devices. ➢ Do not use shielded cables as inverter power cables and motor cables.

8.4.5 Live device chassis

■ **Live housing principle**

After the inverter is started, there is sensible voltage on the housing, and you may feel an electric shock when touching the housing. The chassis, however, is not live (or the voltage is far lower than the human safety voltage) when the inverter is powered on but not running.

■ **Symptom and solution**

Symptom	Solution
Live device housing	● If there is power distribution grounding or ground stud on the site, ground the inverter cabinet housing through the power ground or stud. ● If there is no grounding on the site, you need to connect the motor housing to the inverter grounding terminal PE, and ensure that the jumper at "EMC/J10" at the middle of the inverter housing is shorted already (or the H10 screw is mounted properly).

9 Inspection and maintenance

9.1 Daily inspection and regular maintenance

The inverter internal components will become aging due to the influence of environmental temperature, humidity, dust, vibration and other factors, which causes the potential failure or shortens the service life. Therefore, to extend the inverter service life and prevent safety hazards, daily inspection and regular maintenance are required.

Check item	Content	Method
Daily inspection: Recommended on each day.		
Ambient environment	Whether the ambient temperature, humidity, vibration, dust, gas, and oil are too great	Visual inspection, and use instruments for measurement.
	Whether there are foreign matters, such as tools, or dangerous substances placed nearby	Visual inspection
Power supply voltage	Whether the voltage between the main circuit and control circuit is normal	Multimeter or voltage meter
Keypad	Whether display is clear	Visual inspection
	Whether some characters or fields are displayed incompletely	Visual inspection
Fan	Whether it runs normally	Visual inspection
Load	Whether the motor is overloaded or overheating, or it sounds abnormally.	Ammeter, auditory, and Instrument
Regular maintenance: Recommended on a quarterly basis, especially in harsh environments such as with dust, oil, or corrosive gases. Before regular maintenance, cut off the power and wait at least 15 min.		
Machine	Whether the bolts become loose or come off	Visual inspection
	Whether the machine is deformed, cracked, or damaged, or the color changes due to overheating and aging	Visual inspection
	Whether much dirt or dust is attached	Visual inspection
	Whether there is abnormal sound or vibration, odor, discoloration (transformer, reactor and fan)	Auditory, olfactory, and visual inspection
Motor	Whether the installation is secure, motor insulation is normal, and the fan runs properly	Auditory, instrument or visual inspection
Cable	Whether there is discoloration, deformation, or	Visual inspection

Check item	Content	Method
	damage	
	Whether the cable connectors or bolts become loose	Visual inspection
Connection terminal	Whether there is overheating or damage	Visual inspection
Electrolytic capacitor	Whether there is electrolyte leakage, discoloration, cracks, and housing expansion	Visual inspection
	Whether the safety valve is exposed outside	Visual inspection
Contactor and relay	Whether there is vibration sound during running	Auditory inspection
	Check whether the contacts are in good contact.	Visual inspection
Control PCB and connector	Whether the screws and connectors become loose	Screw them up.
	Whether there is unusual smell or discoloration	Olfactory and visual inspection
	Whether there is corrosion or rust stains	Visual inspection
Ventilation duct	Whether there are foreign matters blocking or attached to the cooling fan, air inlets, or air outlets	Visual inspection

For more details about maintenance, contact the local INVT office, or visit our website www.invt.com, and choose **Support** > **Services**.

9.2 Replacement of wearing parts

The wearing parts of inverter mainly include the cooling fan and electrolytic capacitor, of which the service life is closely related to the running environment and maintenance condition. In normal use at the ambient temperature of 45°C, the general life time is as follows:

Part	Service life
Fan	≥ 5 years
Electrolytic capacitor	≥ 5 years

9.2.1 Cooling fan

■ **Possible damage cause**

Bearing wear, blade aging, water, oil, dust and other environmental factors may cause circuit board damage.

Cooling fan replacement procedure

Disassembling a fan (for models using air cooling)	
Step 1 Press the snap of the plastic fan cover gently to remove the fan cover. 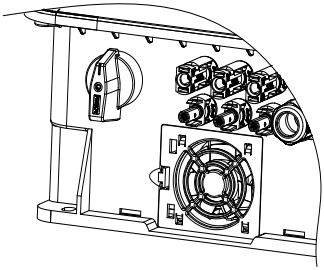	Step 2 Lift the fan upward, and remove the fan connection terminal. 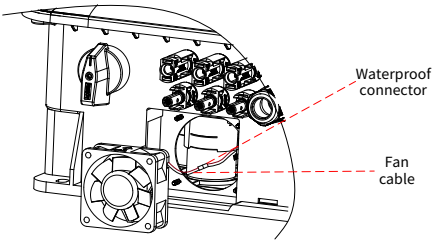
Assembling a fan (for models using air cooling)	
Step 1 Insert the fan connection terminal into the power outlet that comes with the machine. See the following figure. 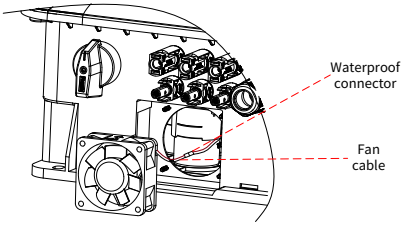	Step 2 Place the fan into the target mounting area and align the four fixing holes at the fan bottom with the positioning posts. 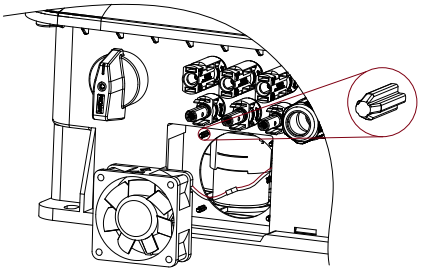
Step 3 Close the fan cover and press the snap. 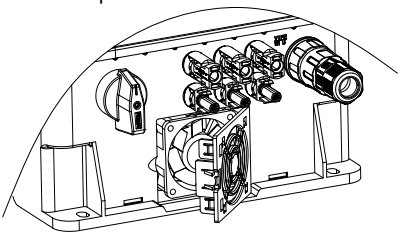	

Note:

- Before disassembling or installing the inverter, stop the inverter, cut off the power, and wait at least 15 minutes.
- Different inverter models may be slightly different in the fan quantity and position. The fan disassembly and assembly methods may be different.
- When installing the fan, ensure the air arrow points upward, and regardless of whether the fan is installed at the bottom or the top, to ensure that the fan blows upward.

9.2.2 Electrolytic capacitor

- **Possible damage cause**

  The possible causes include high input power harmonics, high ambient temperature, frequent load jumps, and electrolyte aging.

- **Filter capacitor replacement**

  It is recommended that a professional be asked for the replacement because the filter capacitor involves inverter internal components.

9.3 Reforming

If the inverter has been left unused for a long time, you need to follow the instructions to reform the DC bus electrolytic capacitor before using it. The storage time is calculated from the date the inverter is delivered. For detailed operation, contact us.

Storage time	Operation principle
Less than 1 year	No charging operation is required.
1 to 2 years	Before the first run, apply the voltage of one class lower than the inverter voltage class to the inverter for 1 hour.
2 to 3 years	Use a voltage controlled power supply to charge the inverter: • Charge the inverter at 25% of the rated voltage for 30 minutes, • and then charge it at 50% of the rated voltage for 30 minutes, • at 75% for another 30 minutes, • and finally charge it at 100% of the rated voltage for 30 minutes.
More than 3 years	Use a voltage controlled power supply to charge the inverter: • Charge the inverter at 25% of the rated voltage for 2 hours, • and then charge it at 50% of the rated voltage for 2 hours, • at 75% for another 2 hours, • and finally charge it at 100% of the rated voltage for 2 hours.

The method for using a voltage controlled power supply to charge the inverter is described as follows:

The selection of a voltage controlled power supply depends on the power supply of the

inverter, and either a DC or AC voltage controlled power supply can be selected. When using a DC voltage controlled power supply, for inverters with an input voltage of 450VDC, you can use a 400V DC source; for inverters with an input voltage of 900V, you can use an 800V DC source. When using an AC voltage controlled power supply, for inverters with an incoming voltage of 1PH/3PH 230 V AC, you can use a 230 V AC/2 A voltage regulator. Both 1PH and 3PH inverters can be charged with a 1PH voltage controlled power supply (connect L+ to L1, and N to L2 or L3). All the DC bus capacitors share one rectifier, and therefore they are all charged.

For inverters of a high voltage class, ensure that the voltage requirement (for example, 380 V) is met during charging. Capacitor changing requires little current, and therefore you can use a small-capacity power supply (2 A is sufficient).

The method for using a resistor (incandescent lamp) to charge the drive is described as follows:

If you directly connect the drive device to a power supply to charge the DC bus capacitor, it needs to be charged for a minimum of 60 minutes. The charging operation must be performed at a normal indoor temperature without load, and you must connect a resistor in series mode in the 3PH circuit of the power supply.

For an AC power drive device, use a resistor of 1kΩ/100W. If the voltage of the power supply is no higher than 380 V, you can also use an incandescent lamp of 100W. If an incandescent lamp is used, it may go off or the light may become very weak.

Figure 9-1 AC power drive device charging circuit example

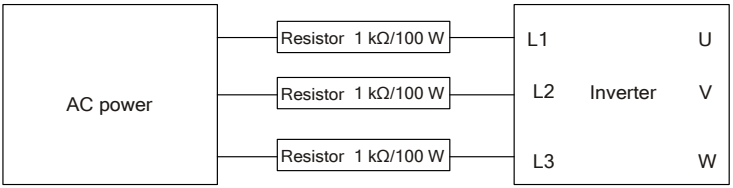

For a DC power drive device:

Figure 9-2 DC power drive device charging circuit example

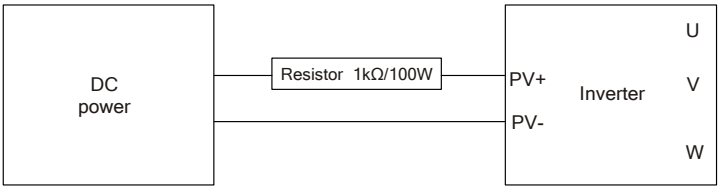

Appendix A Derating

If the ambient temperature at the inverter installation site exceeds 45°C, the inverter installation site altitude exceeds 1000m, a cover with heat dissipation vents is used, or the carrier frequency is higher than the recommended (see P00.14), the inverter needs to be derated.

A.1 Derating due to temperature

When the temperature is higher than 45°C, the rated output current is derated by 1% for each increased 1°C.

Note: It is not recommended to use the inverter at an environment with the temperature higher than 60°C. If you do, we shall not hold accountable for the consequences caused.

A.2 Derating due to altitude

When the inverter installation site altitude is lower than 1000m, the inverter can run at the rated power. When the altitude exceeds 1000m, derate by 1% for every increase of 100m. When the altitude exceeds 3000m, consult the our local dealer or office for details.

Appendix B Application standards

B.1 List of application standards

The following table describes the application standards that inverters comply with.

IEC/EN 61800-3	Adjustable speed electrical power drive system. Part 3: EMC requirements and specific test methods
IEC/EN 61800-5-1	Adjustable speed electrical power drive systems. Part 5-1: Safety requirements—Electrical, thermal and energy
IEC62109-1	Safety of power converters for use in photovoltaic powetsystems -Part 1:General requirementse
IEC62109-2	IEC62109-2:2011Safety of power converters for use in photovoltaic power systems -Part 2:Particular requirements for inverterse

B.2 EMC compliance declaration

Electro Magnetic Compatibility (EMC) describes the ability of electronic and electrical devices to work properly in the electromagnetic environment and not to generate electromagnetic interference that affects other local devices or systems. The inverter is compliant with the EMC product standard (EN 61800-3) and applied to both the first environment and the second environment.

B.3 EMC product standard

The EMC product standard (EN 61800-3) describes the EMC requirements on inverters.

Application environment categories:

First environment: Civilian environment, including application scenarios where the inverter is directly connected without intermediate transformer to a low-voltage power supply network which supplies residential buildings.

Second environment: All locations outside a residential area.

C1: Rated voltage lower than 1000V, applied to environments of Category I.

C2: Rated voltage lower than 1000 V, non-plug, socket, or mobile devices; power drive systems that must be installed and operated by specialized personnel when applied to environments of Category I

Note: The product may generate radio interference in some environments, and you need to take measures to reduce the interference.

Category C3: Rated voltage lower than 1000V, applied to the second environment. They cannot be applied to the first environment.

Note: Inverters of category C3 cannot be applied to civilian low-voltage public grids. When applied to such grids, the inverter may generate radio frequency electromagnetic interference.

Category C4: Inverter of rated voltage higher than 1000 V, or rated current higher or equal to 400 A, applied to complex systems in the second environment.

Note: The EMC standard IEC/EN 61800-3 no longer restricts the power distribution of the inverter, but defines the use, installation, and commissioning of the inverter. Specialized personnel or organizations must have the necessary skills (including the EMC-related knowledge) for installing and/or performing commissioning on the electrical drive systems.

Appendix C Dimension drawings

Figure C-1 Mounting dimensions diagram

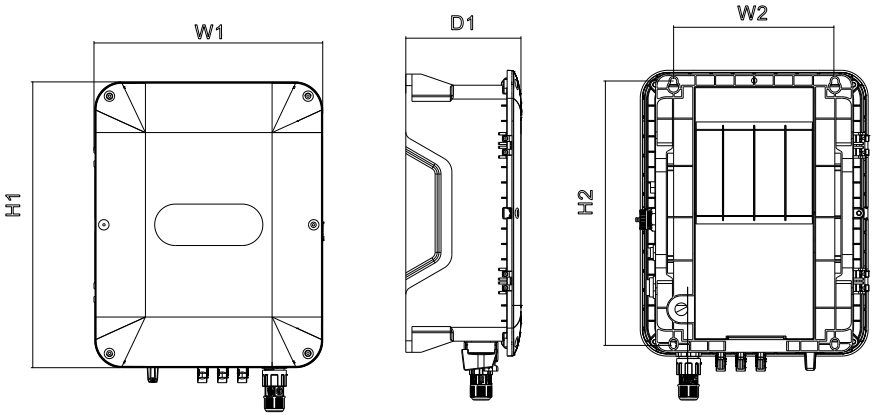

TableC-1 Dimensions and mounting hole size (unit: mm)

Frame	Outline dimensions			Mounting hole distance		Hole diameter
	W1	H1	D1	W2	H2	
A1	252	247	120	194	232.5	ø7
A2	270	274	150	202	249	ø7
A3	298	372	150	210	342	ø8
A4	481	390	216	275	357	ø7

Appendix D Peripheral accessories

D.1 Cable

Cables mainly include power cables and control cables. For the selection of cable types, see the following table.

Cable type		Symmetrical shielded cable	Four-core cable	Double-shielded twisted-pair cable	Single-shielded twisted-pair cable
Power cable	Input power cable	✓	-	-	-
	Motor cable	✓	-	-	-
Control cable	Analog signal control cable	-	-	✓	-
	Digital signal control cable	-	-	✓	✓

D.1.1 Power cable

Power cables mainly include input power cables and motor cables. To meet the EMC requirements stipulated in the CE standards, it is recommended to use symmetrical shielded cables as input power cables and motor cables (as shown in the following figure). Compared with four-core cables, symmetrical shielded cables can reduce electromagnetic radiation as well as the current and loss of the motor cables.

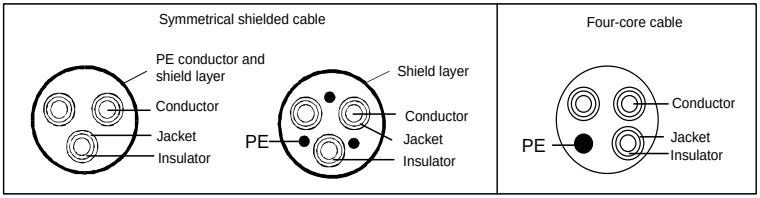

Inverter model	Recommended cable size (mm²)			
	R, S, T U, V, W	PE	PV+ (per group)	PV- (per group)
SP100-2R2-D2-6-S	2.5	2.5	2.5	2.5
SP100-2R2-D4-6-S	2.5	2.5	2.5	2.5
SP100-004-D4-6-S	2.5	2.5	2.5	2.5
SP100-5R5-D4-6-S	2.5	2.5	2.5	2.5
SP100-7R5-D4-6-S	4	4	2.5	2.5
SP100-011-D4-6-S	6	6	2.5	2.5

Inverter model	Recommended cable size (mm²)			
	R, S, T U, V, W	PE	PV+ (per group)	PV- (per group)
SP100-015-D4-6-S	6	6	2.5	2.5
SP100-018-D4-6-S	10	10	2.5	2.5
SP100-022-D4-6-S	16	16	2.5	2.5
SP100-0R7-2-T-6-S	2.5	2.5	2.5	2.5
SP100-1R5-2-T-6-S	2.5	2.5	2.5	2.5
SP100-2R2-2-T-6-S	2.5	2.5	2.5	2.5
SP100-2R2-4-T-6-S	2.5	2.5	2.5	2.5
SP100-004-4-T-6-S	2.5	2.5	2.5	2.5
SP100-2R2-2-6-S	2.5	2.5	2.5	2.5
SP100-2R2-4-6-S	2.5	2.5	2.5	2.5
SP100-004-4-6-S	2.5	2.5	2.5	2.5
SP100-5R5-4-6-S	2.5	2.5	2.5	2.5
SP100-7R5-4-6-S	4	4	2.5	2.5
SP100-011-4-6-S	6	6	2.5	2.5
SP100-015-4-6-S	6	6	2.5	2.5
SP100-018-4-6-S	10	10	2.5	2.5
SP100-022-4-6-S	10	10	2.5	2.5

Note:

- The cables recommended for the main circuit can be used in scenarios where the ambient temperature is lower than 45°C, the wiring distance is shorter than 200m, and the current is the rated current.
- The temperature limit of the cables in the table is 70°C. If you use a cable with the conductor temperature limit of 90°C, the cable must comply with relevant national standards and specifications.
- The terminals PV+ and PV- are used to connect the solar modules.
- If the electrical conductivity of the motor cable shield layer does not meet the requirements, a separate PE conductor must be used.
- The input power cables and motor cables must be able to carry the corresponding load currents.
- The maximum temperature margin of the motor cables in continuous operation cannot be lower than 70°C.
- The conductivity of the PE grounding conductor is the same as that of the phase conductor, that is, the cross-sectional areas are the same.

D.1.2 Control cable

Control cables mainly include analog signal control cables and digital signal control cables. Analog signal control cables use twisted double shielded cables (Figure a), with a separate shielded twisted pair for each signal and different ground wires for different analog signals. For digital signals, a double-shielded cable is preferred, but single-shielded or unshielded twisted pairs can also be used (Figure b).

Figure D-1 Control cable routing

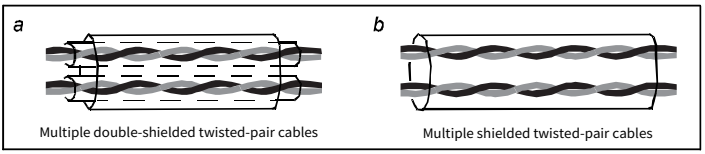

Note:

- Analog signal cables and digital signal cables must be routed separately.
- For frequency signals, only shielded cables can be used. A relay cable needs to carry the metal braided shield layer.

D.2 Breaker and electromagnetic contactor

The circuit breaker is mainly used to prevent electric shock accidents and short circuits to the ground that may cause leakage current fire. The electromagnetic contactor is mainly used to control the main circuit power on and off, which can effectively cut off the input power of the inverter in case of system failure to ensure safety.

Table D-1 Fuse, breaker, and contactor model selection

Inverter model	Breaker rated current (A)	Fast-acting fuse rated current (A)	Contactor rated current (A)
SP100-2R2-2-6-S	16(3PH)/32(1PH)	15(3PH)/35(1PH)	12(3PH)/25(1PH)
SP100-2R2-4-6-S	10	10	9
SP100-004-4-6-S	20	20	18
SP100-5R5-4-6-S	25	35	25
SP100-7R5-4-6-S	32	40	32
SP100-011-4-6-S	40	50	38
SP100-015-4-6-S	50	65	50
SP100-018-4-6-S	63	75	50
SP100-022-4-6-S	63	90	65

Note:

- The accessory specifications described in the preceding table are ideal values. You can select accessories based on the site conditions, but try not to use those with lower values.

- The above recommended parameters are for the recommended selection on the AC input side. The PV side of the SP100 full series has already been equipped with a knife switch, therefore, there is no need for additional circuit breaker configuration. For SP100 models that require power supply from 3 strings of photovoltaic modules, fuses have been configured.

D.3 IoT module

D.3.1 Product overview

The account and password of the IoT platform are the authentication credentials of the platform, which can be used for equipment management and remote operation and maintenance of solar pumps after logging in. Users should keep them properly and take sufficient measures to prevent others from stealing. If the account and password are stolen, it may cause significant losses.

The IoT SIM card has been forcibly bound to the machine and can only be used on the device where the card is first used to power up and network for the first time. Please do not insert the IoT SIM card into other devices, otherwise, the SIM card will be locked.

D.3.2 Downloading the monitoring platform

It is recommended to scan the following QR code with your mobile browser to download the App, or you can log in to the web version (iot.invt.com) for data monitoring.

Note: The QR code includes both Android and iOS versions.

D.3.3 Installing data transmission terminal

The data transmission terminal and the solar pump are fixed through an aviation connector, and the installation procedures are as follows:

Step 1 Insert the data transmission terminal along the connector guide slot.
Step 2 Tighten the fastening cap clockwise.

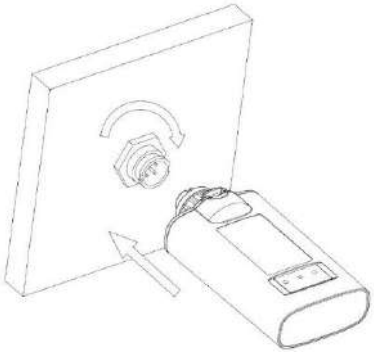

Note:

- For the 4G version (ICA400-06) data transmission terminal, the installation of a SIM card is required first.
- Insert or remove the data transmission terminal, only when the power is off.

D.3.4 Instructions of data transmission terminal status

The status of the data transmission terminal can be confirmed through LED indicators.

Indicator identifier	Indicates	Description (all indicators are green)
NET	Status of communication between data transmission terminal and base station	Off: No card or 4G module not registered on a network. Slow flashing (on: 200ms; off: 1800ms): Searching for networks. Slow flashing (on: 1800ms; off: 200ms): Succeeded in base station connection. Fast flashing (on: 125ms; off: 125ms): Data transmission mode.
COM	Status of communication between data transmission terminal and inverter	On or Off: System exceptions happened. Flashing (on: 100ms; off: 100ms): Communication failed. Flashing (on: 10ms; off: 10ms): Transferring data.
SER	Status of communication between data transmission terminal and server	On: The data transmission terminal has already connected to the server. Flashing (on: 100ms; off: 100ms): Connection initializing. Off: The data transmission terminal failed to connect to the server.

If the base station signal is strong, in normal running, the data transmission terminal indicators work as follows:

1. After power-on, COM and SER start flashing slowly, indicating that the data transmission terminal performs initialization.
2. About 20s later, NET starts flashing slowly (indicating registering on a network).
3. About 30s later, the registration is successful. NET starts flashing slowly.
4. About 10s later, COM starts flashing fast, indicating that the communication with the inverter is successful.
5. About 40s later, NET flashes slowly, COM flashes fast, and SER is on, indicating that the data transmission terminal works properly.
6. When it uploads data through a 4G network, NET flashes fast, and SER is on.

D.3.5 Fault indication and solutions

If a platform data exception occurs when the data transmission terminal works, check the following table for the solution according to the indicator status. If the exception persists, contact our aftersales personnel.

NET indicator ○ NET	COM indicator ○ COM	SER indicator ○ SER	Fault description	Fault cause	Solution
Any state	Off	Any state	Abnormal communication between the data transmission terminal and inverter	1. Loose connection between the data transmission terminal and inverter 2. Communication rate mismatch between the data transmission terminal and inverter	1. Check the connection between the data transmission terminal and inverter. Remove and insert the data transmission terminal again. 2. Ensure that the communication rate of the data transmission terminal is consistent with that of the inverter.
Flashing (off	Any state	Blinking	Abnormal communicatio	1. SIM card account in arrears	1. Ensure that there is sufficient balance in

NET indicator ○ NET	COM indicator ○ COM	SER indicator ○ SER	Fault description	Fault cause	Solution
longer than on)			n between the data transmission terminal and base station	2. Weak 4G signal	the SIM card account. 2. Ensure that the SIM card has been inserted properly.
Off	Off	Off	Power supply exception	1. Loose connection between the data transmission terminal and inverter 2. Small inverter power 3. Data transmission terminal exception	1. Check the connector and re-plug. 2. Ensure that the inverter output power meets the requirements. 3. Contact the aftersales personnel for handling.

Note:

- Use the above table for query two minutes after the data transmission terminal is powered on.
- Ensure that the data transmission terminal works properly before leaving the site. If you find any exception, please contact our customer service at the first time and do not leave the site.

D.4 Optional parts

Reactors, filters, and mounting brackets are external accessories and need to be specifically specified when purchasing.

D.4.1 Harmonic filter

If you want to use long cables between the VFD and the motor, select external output reactors, dv/dt attenuation filters, or sine-wave filters based on the motor cable length. This helps mitigate excessive dv/dt, reducing voltage stress on the motor windings as well as protecting them, and extending the motor's lifespan. Refer to the following table for recommended output filter selections according to motor cable length.

Non-shielded cable length	50m–150m	150m–450m	450m–1000m
Shielded cable length	30m–100m	100m–230m	230m–500m
Output filter type	Output reactor (1%)	-	-
	-	dv/dt filters	-
	-	-	Sine-wave filters

Table D-2 Reactor selection

Inverter model	Input reactor	Output reactor
SP100-2R2-D2-6-S	-	GDL-OCL0010-4CU
SP100-2R2-D4-6-S	-	GDL-OCL0006-4CU
SP100-004-D4-6-S	-	GDL-OCL0010-4CU
SP100-5R5-D4-6-S	-	GDL-OCL0014-4CU
SP100-7R5-D4-6-S	-	GDL-OCL0020-4CU
SP100-011-D4-6-S	-	GDL-OCL0025-4CU
SP100-015-D4-6-S	-	GDL-OCL0035-4AL
SP100-018-D4-6-S	-	GDL-OCL0040-4AL
SP100-022-D4-6-S	-	GDL-OCL0050-4AL
SP100-0R7-2-T-6-S	GDL-ACL0005-4CU	GDL-OCL0005-4CU
SP100-1R5-2-T-6-S	GDL-ACL0006-4CU	GDL-OCL0006-4CU
SP100-2R2-2-T-6-S	GDL-ACL0014-4CU	GDL-OCL0010-4CU
SP100-2R2-4-T-6-S	GDL-ACL0006-4CU	GDL-OCL0006-4CU
SP100-004-4-T-6-S	GDL-ACL0014-4CU	GDL-OCL0010-4CU
SP100-2R2-2-6-S	GDL-ACL0014-4CU	GDL-OCL0010-4CU
SP100-2R2-4-6-S	GDL-ACL0006-4CU	GDL-OCL0006-4CU
SP100-004-4-6-S	GDL-ACL0014-4CU	GDL-OCL0010-4CU
SP100-5R5-4-6-S	GDL-ACL0020-4CU	GDL-OCL0014-4CU
SP100-7R5-4-6-S	GDL-ACL0025-4CU	GDL-OCL0020-4CU
SP100-011-4-6-S	GDL-ACL0035-4AL	GDL-OCL0025-4CU
SP100-015-4-6-S	GDL-ACL0040-4AL	GDL-OCL0035-4AL
SP100-018-4-6-S	GDL-ACL0051-4AL	GDL-OCL0040-4AL
SP100-022-4-6-S	GDL-ACL0051-4AL	GDL-OCL0050-4AL

Note:

- The rated input voltage drop of input reactor is designed to ≥1.5%.
- The rated output voltage drop of output reactor is designed to 1%.

- The recommended input reactor models for the -2 model is only applicable to the -2 model and not applicable to the -S2 and -SS2 models The recommended output reactor models for model 2 is only applicable to models -2 and S2, not to models -SS2.

Table D-3 Output filter selection

Inverter model	dv/dt filter	Sine-wave filter
SP100-2R2-D2-6-S	GDL-DUL0010-4CU	GDL-OSF0010-4AL
SP100-2R2-D4-6-S	GDL-DUL0005-4CU	GDL-OSF0005-4AL
SP100-004-D4-6-S	GDL-DUL0010-4CU	GDL-OSF0010-4AL
SP100-5R5-D4-6-S	GDL-DUL0014-4CU	GDL-OSF0014-4AL
SP100-7R5-D4-6-S	GDL-DUL0020-4CU	GDL-OSF0020-4AL
SP100-011-D4-6-S	GDL-DUL0025-4CU	GDL-OSF0025-4AL
SP100-015-D4-6-S	GDL-DUL0032-4CU	GDL-OSF0032-4AL
SP100-018-D4-6-S	GDL-DUL0040-4AL	GDL-OSF0040-4AL
SP100-022-D4-6-S	GDL-DUL0045-4AL	GDL-OSF0045-4AL
SP100-0R7-2-T-6-S	GDL-DUL0005-4CU	GDL-OSF0005-4AL
SP100-1R5-2-T-6-S	GDL-DUL0010-4CU	GDL-OSF0010-4AL
SP100-2R2-2-T-6-S	GDL-DUL0010-4CU	GDL-OSF0010-4AL
SP100-2R2-4-T-6-S	GDL-DUL0005-4CU	GDL-OSF0005-4AL
SP100-004-4-T-6-S	GDL-DUL0010-4CU	GDL-OSF0010-4AL
SP100-2R2-2-6-S	GDL-DUL0010-4CU	GDL-OSF0010-4AL
SP100-2R2-4-6-S	GDL-DUL0005-4CU	GDL-OSF0005-4AL
SP100-004-4-6-S	GDL-DUL0010-4CU	GDL-OSF0010-4AL
SP100-5R5-4-6-S	GDL-DUL0014-4CU	GDL-OSF0014-4AL
SP100-7R5-4-6-S	GDL-DUL0020-4CU	GDL-OSF0020-4AL
SP100-011-4-6-S	GDL-DUL0025-4CU	GDL-OSF0025-4AL
SP100-015-4-6-S	GDL-DUL0032-4CU	GDL-OSF0032-4AL
SP100-018-4-6-S	GDL-DUL0040-4AL	GDL-OSF0040-4AL
SP100-022-4-6-S	GDL-DUL0045-4AL	GDL-OSF0045-4AL

D.4.2 EMC filter

Table D-4 EMC filter selection

Inverter model	Input filter	Output filter
SP100-2R2-D2-6-S	-	FLT-L04016L-B
SP100-2R2-D4-6-S	-	FLT-L04006L-B
SP100-004-D4-6-S	-	FLT-L04016L-B
SP100-5R5-D4-6-S	-	

Inverter model	Input filter	Output filter
SP100-7R5-D4-6-S	-	FLT-L04032L-B
SP100-011-D4-6-S	-	
SP100-015-D4-6-S	-	FLT-L04045L-B
SP100-018-D4-6-S	-	
SP100-022-D4-6-S	-	FLT-L04065L-B
SP100-0R7-2-T-6-S	FLT-P04006L-B	FLT-L04006L-B
SP100-1R5-2-T-6-S	FLT-P04016L-B	FLT-L04016L-B
SP100-2R2-2-T-6-S		
SP100-2R2-4-T-6-S	FLT-P04006L-B	FLT-L04006L-B
SP100-004-4-T-6-S	FLT-P04016L-B	FLT-L04016L-B
SP100-2R2-2-6-S		
SP100-2R2-4-6-S	FLT-P04006L-B	FLT-L04006L-B
SP100-004-4-6-S	FLT-P04016L-B	FLT-L04016L-B
SP100-5R5-4-6-S		
SP100-7R5-4-6-S	FLT-P04032L-B	FLT-L04032L-B
SP100-011-4-6-S		
SP100-015-4-6-S	FLT-P04045L-B	FLT-L04045L-B
SP100-018-4-6-S		
SP100-022-4-6-S	FLT-P04065L-B	FLT-L04065L-B

Note: The recommended input filter models for the -2 model is only applicable to the -2 model and not applicable to the -S2 and -SS2 models The recommended output filter models for model 2 is only applicable to models -2 and S2, not to models -SS2.

D.4.3 Anti-thief plate

D.4.3.1 Assembly procedure

Step 1 Mount the security plate to the wall with expansion screws.

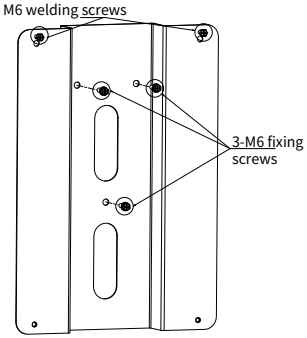

Step 2 Attach the machine (welding screw) to the security plate with screws on the plate.

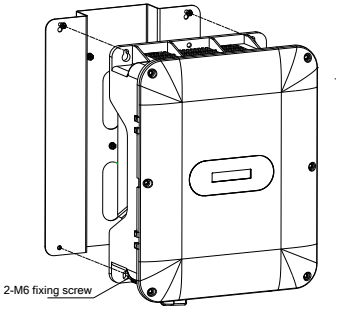

Step 3 Lock the machine to the security plate through the anti-theft password lock.

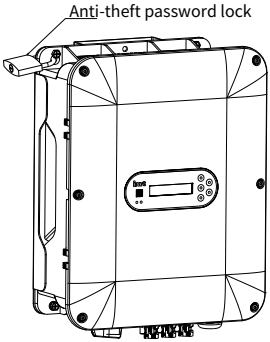

D.4.3.2 Dimensions

Table D-5 Anti-thief plate

Product frame	Anti-thief plate model	Dimension drawings (Unit: mm)
A1	PAE-A1	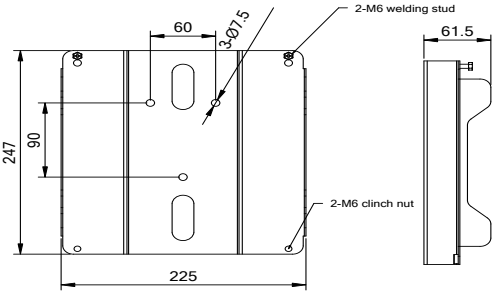
A2	PAE-A2	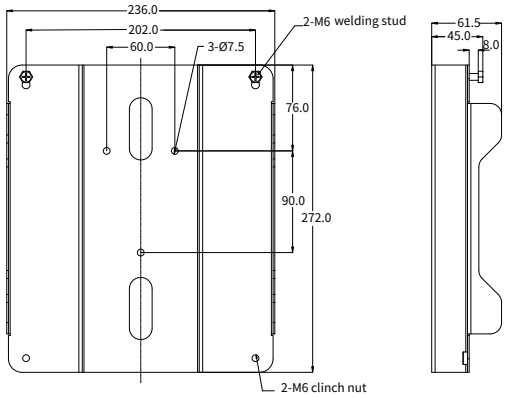

Product frame	Anti-thief plate model	Dimension drawings (Unit: mm)
A3	PAE-A3	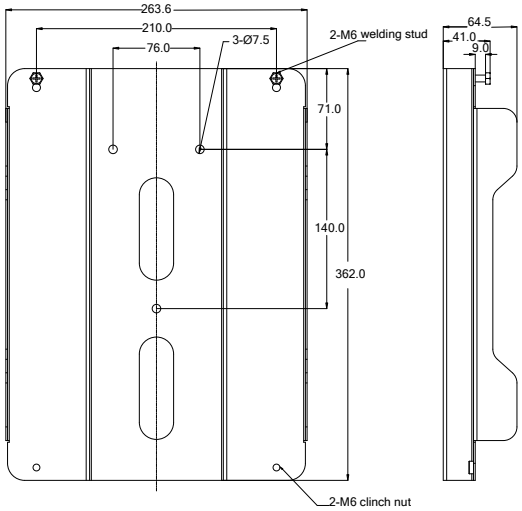
A4	PAE-A4	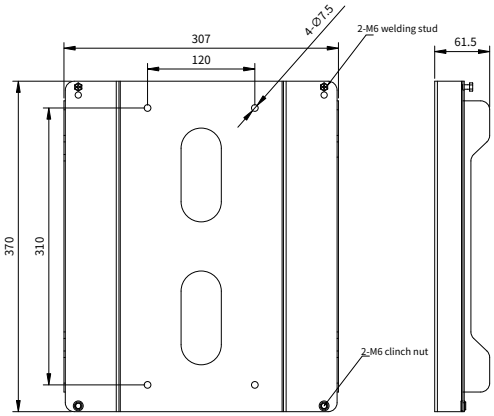

D.4.4 Solar panel

Table D-6 Solar panel model selection

Inverter model	Open-circuit voltage class of PV module			
	45±1V		52±1V	
	Module power	Number of modules per string * number of strings	Module power	Number of modules per string * number of strings
SP100-0R7-2-T-6-S	550	3*1	630	3*1
SP100-1R5-2-T-6-S	550	4*1	630	4*1
SP100-2R2-2-T-6-S	550	6*1	630	5*1
SP100-2R2-4-T-6-S	550	6*1	630	6*1
SP100-004-4-T-6-S	550	9*1	630	9*1
SP100-2R2-2-6-S	550	9*1	630	8*1
SP100-2R2-4-6-S	550	15*1	630	13*1
SP100-004-4-6-S	550	15*1	630	13*1
SP100-5R5-4-6-S	550	15*1	630	13*1
SP100-7R5-4-6-S	550	16*1	630	15*1
SP100-011-4-6-S	550	15*2	630	14*2
SP100-015-4-6-S	550	16*2	630	15*2
SP100-018-4-6-S	550	15*3	630	14*3
SP100-022-4-6-S	550	15*4	630	14*4
SP100-2R2-D2-6-S	550	9*1	630	8*1
SP100-2R2-D4-6-S	550	15*1	630	13*1
SP100-004-D4-6-S	550	15*1	630	13*1
SP100-5R5-D4-6-S	550	15*1	630	13*1
SP100-7R5-D4-6-S	550	16*1	630	15*1
SP100-011-D4-6-S	550	15*2	630	14*2
SP100-015-D4-6-S	550	16*2	630	15*2
SP100-018-D4-6-S	550	15*3	630	14*3
SP100-022-D4-6-S	550	15*4	630	14*4

Appendix E Function parameter list

The function parameters of the inverter are divided into groups by function. Each group includes several function codes (each function code identifies a function parameter). A three-level menu style is applied to function codes. For example, "P08.08" indicates the 8th function code in the P08 group. The inverter supplies the password protection function. For detail settings, see P07.00. The parameters adopt the decimal system (DEC) and hexadecimal system (0–F). If the hexadecimal system is adopted, all bits are mutually independent on data during parameter editing. The symbols in the table are described as follows:

"○" indicates that the value of the parameter can be modified when the inverter is in stopped or running state.

"◎" indicates that the value of the parameter cannot be modified when the inverter is in running state.

"●" indicates that the value of the parameter is detected and recorded, and cannot be modified. (When "Restore factory settings" is performed, the actual detected parameter values or recorded values will not be restored.)

Group P00—Basic functions

Function code	Name	Description	Default	Modify
P00.00	Speed control mode	Specifies a speed control mode. Setting range: 0–2 0: SVC mode 0 1: SVC mode 1 2: Space voltage vector control mode **Note:** Before using a vector control mode (0 or 1), enable the inverter to perform motor parameter autotuning first.	2	◎
P00.01	Channel of running commands	Specifies a channel of running commands. Setting range: 0–2 0: Keypad 1: Terminal 2: Communication	1	○
P00.03	Max. output frequency	The function code is used to set the max. output frequency of the inverter, which is the basis of the frequency setting and the acceleration (ACC) and deceleration (DEC)	50.00Hz	◎

Function code	Name	Description	Default	Modify
		speed. Setting range: Max (P00.04, 10.00Hz)–599.00Hz		
P00.04	Upper limit of running frequency	Specifies the upper limit of the inverter output frequency, which should be smaller than or equal to the max. output frequency. If the set frequency is higher than the upper limit of the running frequency, the upper limit of the running frequency is used for running. Setting range: P00.05–P00.03 (max. output frequency)	50.00Hz	◎
P00.05	Lower limit of running frequency	Specifies the lower limit of the inverter output frequency. If the set frequency is lower than the lower limit of the running frequency, the lower limit of the running frequency is used for running. Setting range: 0.00Hz–P00.04 (Upper limit of running frequency) **Note:** Max. output frequency ⩾ Upper limit of frequency ⩾ Lower limit of frequency	0.00Hz	◎
P00.06	Setting channel of A frequency command	Specifies the frequency command source. Setting range: 0–8 0: Keypad digital 1: AI1 2–7: Reserved 8: Modbus communication	0	○
P00.10	Frequency set through keypad	Specifies the initial inverter frequency set value when A and B frequency commands are set by keypad. Setting range: 0.00Hz–P00.03 (Max. output frequency)	50.00Hz	○
P00.11	ACC time 1	Specifies the ACC time of ramp frequency. Setting range: 0.0–3600.0s	Model depended	○
P00.12	DEC time 1	Specifies the DEC time of ramp frequency. Setting range: 0.0–3600.0s	Model depended	○

Function code	Name	Description	Default	Modify
P00.13	Running direction	Specifies the running direction. Setting range: 0–2 0: Run in default direction 1: Run in reverse direction 2: Disable reverse running	0	○
P00.14	Carrier frequency setting	Specifies the carrier frequency. A high carrier frequency will have an ideal current waveform, few current harmonics, and small motor noise, but it will increase the switch loss, increase inverter temperature, and impact the output capacity. At the same time, the inverter current leakage and electrical magnetic interference will increase. On the contrary, an extremely-low a carrier frequency may cause unstable operation at low frequency, decrease the torque, or even lead to oscillation. The carrier frequency has been properly set in the factory before the inverter is delivered. In general, you do not need to modify it. The mapping between inverter models and default carrier frequency values is as follows: ⩽2.2kW: 4.0kHz ⩾4kW: 2.0kHz Setting range: 1.0–15.0kHz **Note:** When the frequency used exceeds the default carrier frequency, the inverter needs to derate by 10% for each increased of 1kHz.	Model depended	○
P00.15	Motor parameter autotuning	Specifies the motor autotuning function. Setting range: 0–3 0: No operation 1: Dynamic autotuning 2: Static autotuning 1 (complete autotuning)	0	◎

Function code	Name	Description	Default	Modify
		3: Static autotuning 2 (partial autotuning)		
P00.18	Function parameter restore	Specifies the function parameter restoration. Setting range: 0–4 0: No operation 1: Restore to default values (excluding motor parameters) 2: Clear fault or pre-alarm records 3: Reserved 4: Back up parameters **Note:** Restoring to default values will delete the user password. After the selected operation is performed, the function code is automatically restored to 0.	0	◎

Group P01—Start and stop control

Function code	Name	Description	Default	Modify
P01.08	Stop mode	Specifies the stop mode. Setting range: 0–1 0: Decelerate to stop. When a stop command takes effect, the inverter lowers output frequency based on the DEC mode and the defined DEC time; when the frequency drops to 0Hz, the inverter stops. 1: Coast to stop. After a stop command takes effect, the inverter ceases the output immediately, and the load coasts to stop according to mechanical inertia.	0	○
P01.18	Terminal-based running command protection at power-on	Specifies whether the terminal running command is valid at power-on. Setting range: 0–1 0: The terminal running command is invalid at power-on 1: The terminal running command is valid at power-on	1	○

Function code	Name	Description	Default	Modify
P01.21	Power-off restart selection	Specifies whether the inverter automatically runs after re-power on. Setting range: 0–1 0: Disable 1: Enable	1	○

Group P02—Parameters of motor 1

Function code	Name	Description	Default	Modify
P02.00	Type of motor 1	Setting range: 0–1 0: Asynchronous motor (AM) 1: Synchronous motor (SM)	0	◎
P02.01	Rated power of AM 1	Setting range: 0.1–3000.0kW	Model depended	◎
P02.02	Rated frequency of AM 1	Setting range: 0.01–599.00Hz	50.00Hz	◎
P02.03	Rated speed of AM 1	Setting range: 1–36000rpm	Model depended	◎
P02.04	Rated voltage of AM 1	Setting range: 0–1200V	Model depended	◎
P02.05	Rated current of AM 1	Setting range: 0.8–6000.0A	Model depended	◎
P02.06	Stator resistance of AM 1	Setting range: 0.001–65.535Ω	Model depended	○
P02.07	Rotor resistance of AM 1	Setting range: 0.001–65.535Ω	Model depended	○
P02.08	Leakage inductance of AM 1	Setting range: 0.1–6553.5mH	Model depended	○
P02.09	Mutual inductance of AM 1	Setting range: 0.1–6553.5mH	Model depended	○
P02.10	No-load current of AM 1	Setting range: 0.1–6553.5A	Model depended	○
P02.15	Rated power of SM 1	Setting range: 0.1–3000.0kW	Model depended	◎

Function code	Name	Description	Default	Modify
P02.16	Rated frequency of SM 1	Setting range: 0.01–599.00Hz	50.00Hz	◎
P02.17	Number of pole pairs of SM 1	Setting range: 1–50	2	◎
P02.18	Rated voltage of SM 1	Setting range: 0–1200V	Model depended	◎
P02.19	Rated current of SM 1	Setting range: 0.8–6000.0A	Model depended	◎
P02.20	Stator resistance of SM 1	Setting range: 0.001–65.535Ω	Model depended	○
P02.21	Direct-axis inductance of SM 1	Setting range: 0.01–655.35mH	Model depended	○
P02.22	Quadrature-axis inductance of SM 1	Setting range: 0.01–655.35mH	Model depended	○
P02.23	Counter-emf constant of SM 1	Setting range: 0–10000	300	○

Group P03—Vector control of motor 1

Function code	Name	Description	Default	Modify
P03.00	Speed-loop proportional gain 1	Setting range: 0.0–200.0 **Note:** Applicable only to vector control mode.	20.0	○
P03.01	Speed-loop integral time 1	Setting range: 0.000–10.000s **Note:** Applicable only to vector control mode.	0.200s	○
P03.02	Low-point frequency for switching	Setting range: 0.00Hz–P03.05 **Note:** Applicable only to vector control mode.	5.00Hz	○
P03.03	Speed-loop proportional gain 2	Setting range: 0.0–200.0 **Note:** Applicable only to vector control mode.	20.0	○

Function code	Name	Description	Default	Modify
P03.04	Speed-loop integral time 2	Setting range: 0.000–10.000s **Note:** Applicable only to vector control mode.	0.200s	○
P03.05	High-point frequency for switching	Setting range: P03.02–P00.03 (Max. output frequency) **Note:** Applicable only to vector control mode.	10.00 Hz	○
P03.06	Speed-loop output filter	Setting range: 0–8 (corresponding to 0–2^8/10ms)	0	○
P03.07	Electromotive slip compensation coefficient of vector control	Slip compensation coefficient is used to adjust the slip frequency of the vector control and improve the speed control accuracy of the system. Adjusting the parameter properly can control the speed steady-state error. Setting range: 50–200%	100%	○
P03.08	Power-generation slip compensation coefficient of vector control	Slip compensation coefficient is used to adjust the slip frequency of the vector control and improve the speed control accuracy of the system. Adjusting the parameter properly can control the speed steady-state error. Setting range: 50–200%	100%	○
P03.09	Current loop proportional coefficient P	Setting range: 0–65535 **Note:** ● The two function codes impact the dynamic response speed and control accuracy of the system. Generally, you do not need to modify the two function codes. ● Applicable to SVC 0 (P00.00 = 0) and SVC 1 (P00.00 = 1).	1000	○
P03.10	Current-loop integral coefficient I	Setting range: 0–65535 **Note:** ● The two function codes impact the dynamic response speed and control accuracy of the system. Generally, you	1000	○

Function code	Name	Description	Default	Modify
		do not need to modify the two function codes. ● Applicable to SVC 0 (P00.00 = 0) and SVC 1 (P00.00 = 1).		
P03.22	Weakening coefficient in constant power zone	Used when the AM is in flux-weakening control. Setting range: 0.1–2.0	0.3	○
P03.23	Lowest weakening point in constant power zone	Setting range: 10–100%	20%	○
P03.24	Max. voltage limit	Specifies the max. inverter output voltage, which is a percentage of the motor rated voltage. Set the value according to onsite conditions. Setting range: 0.0–120.0%	100.0%	○
P03.26	Flux-weakening proportional gain	Setting range: 0–8000	1200	○

Group P04—V/F control

Function code	Name	Description	Default	Modify
P04.00	V/F curve setting of motor 1	Specifies the V/F curve of motor 1 to meet the needs of different loads. Setting range: 0–5 0: Straight-line V/F curve, applicable to constant torque loads 1: Reserved 2: Torque-down V/F curve (power of 1.3) 3: Torque-down V/F curve (power of 1.7) 4: Torque-down V/F curve (power of 2.0) 5: Reserved Curves 2 – 4 are applicable to the torque loads such as fans and water pumps. You can adjust according to the characteristics of the loads to achieve best performance.	0	◎

Function code	Name	Description	Default	Modify
P04.01	Torque boost of motor 1	Setting range: 0.1%–10.0% (0.0%: automatic torque boost)	2.0%	○
P04.02	Torque boost cut-off of motor 1	Setting range: 0.0–50.0%	20.0%	○
P04.09	V/F slip compensation gain of motor 1	Used to compensate for the motor rotating speed change caused by load change in the space voltage vector mode, and thus improve the rigidity of the mechanical characteristics of the motor. Setting range: 0.0–200.0%	100.0%	○
P04.10	Low-frequency oscillation control factor of motor 1	In space voltage vector control mode, the motor, especially the large-power motor, may experience current oscillation at certain frequencies, which may cause unstable motor running, or even inverter overcurrent. You can adjust the two function codes properly to eliminate such phenomenon. Setting range: 0–100	10	○
P04.11	High-frequency oscillation control factor of motor 1	Setting range: 0–100	10	○
P04.12	Oscillation control threshold of motor 1	Setting range: 0.00Hz–P00.03 (Max. output frequency)	30.00Hz	○
P04.34	Single-phase motor control mode	Ones place: Control mode selection 0: Single-phase control mode 1: Two-phase control mode Tens place: secondary winding (Phase V) phase reversal 0: Disable 1: Enable Setting range: 0x00–0x11	0x00	○
P04.35	Secondary winding voltage ratio	Setting range: 0.00–2.00 **Note:** This parameter is only valid in two-phase control mode, secondary winding (phase V) and main winding (phase U).	1.40	○

Function code	Name	Description	Default	Modify
P04.36	Reactive current closed-loop proportional coefficient in SM V/F control	Used to set the proportional coefficient of reactive current closed-loop control. The parameter is valid when the SM V/F control mode is enabled. Setting range: 0–5000	50	○
P04.37	Reactive current closed-loop integral time in SM V/F control	Used to set the integral coefficient of reactive current closed-loop control. The parameter is valid when the SM V/F control mode is enabled. Setting range: 0–5000	50	○

Group P05—Input terminals

Function code	Name	Description	Default	Modify
P05.01	Function of S1	Setting range: 0–63 0: No function 1: Run forward 2–3: Reserved 4: Jog forward 5: Reserved 6: Coast to stop 7: Fault reset 8: Pause running 9: External fault input 10–35: Reserved 36: Switch the running command channel to keypad 37: Switch the running command channel to terminal 38: Switch the running command channel to communication 39–41: Reserved 42: Forcibly switch to power frequency 43: Full-water signal 44: Empty-water signal 45–63: Reserved	1	◎
P05.02	Function of S2		43	◎
P05.03	Function of S3		44	◎
P05.04	Function of S4		0	◎

Function code	Name	Description	Default	Modify
P05.10	Input terminal polarity	Used to set the polarity of the input terminal. Bit0–bit7 correspond to S1–S8 respectively. When a bit is 0, the input terminal is positive; when a bit is 1, the input terminal is negative. Setting range: 0x00–0x1F	0x00	○
P05.32	AI1 lower limit	Setting range: 0.00V–P05.34	0.00V	○
P05.33	Corresponding setting of AI1 lower limit	Setting range: -100.0–100.0%	0.0%	○
P05.34	AI1 upper limit	Setting range: P05.32–10.00V	10.00V	○
P05.35	Corresponding setting of AI1 upper limit	Setting range: -100.0–100.0%	100.0%	○
P05.36	AI1 input filter time	Setting range: 0.000–10.000s	0.100s	○

Group P06—Output terminals

Function code	Name	Description	Default	Modify
P06.03	Relay output RO1	Setting range: 0–33 0: Invalid 1: Running 2: Running forward 3: Running reversely 4: Jogging 5: Inverter in fault 6–13: Reserved 14: Overload pre-alarm 15: Underload pre-alarm 16–19: Reserved 20: External fault is valid 21: Reserved 22: Running time reached 23–25: Reserved 26: DC bus voltage established	30	○

<table>
<tr><th>Function code</th><th>Name</th><th>Description</th><th>Default</th><th>Modify</th></tr>
<tr><td></td><td></td><td>27: Weak-light pre-alarm
28: Switch to power frequency through threshold determination
29: Switch to power frequency through S terminal determination
30: Switch to PV
31: Dry-pumping pre-alarm
32: Full-water pre-alarm
33: Empty-water pre-alarm</td><td></td><td></td></tr>
<tr><td>P06.05</td><td>Output terminal polarity selection</td><td>Specifies the output terminal polarity.
<table><tr><td>Bit0</td><td>Bit1</td><td>Bit2</td><td>Bit3</td></tr><tr><td>Reserved</td><td>Reserved</td><td>RO1</td><td>Reserved</td></tr></table>Setting range: 0x0 –0xF</td><td>0x0</td><td>○</td></tr>
<tr><td>P06.10</td><td>RO1 switch-on delay</td><td>Specifies the delay time corresponding to the electrical level change when a programmable output terminal switches on or switches off.
Setting range: 0.00–500.00s</td><td>10.00s</td><td>○</td></tr>
<tr><td>P06.11</td><td>RO1 switch-off delay</td><td>Specifies the delay time corresponding to the electrical level change when a programmable output terminal switches on or switches off.
Setting range: 0.00–500.00s</td><td>10.00s</td><td>○</td></tr>
</table>

Group P07—Human-machine interface

Function code	Name	Description	Default	Modify
P07.00	User password	By default, the user password is not enabled (the default value is 0). When you set the function code to a non-zero number, password protection is enabled. If you set the function code to 00000, the previous user password is cleared and password protection is disabled. After the user password setting takes effect, you need to enter the password to	0	○

Function code	Name	Description	Default	Modify
		view or edit parameters. Please remember your password and save it in a secure place. After you exit the function code editing interface, the password protection function is enabled within 1 minute. If password protection is enabled, "0.0.0.0.0" is displayed when you press the PRG/ESC key again to enter the function code editing interface. You need to enter the correct user password to enter the interface. Setting range: 0–65535		
P07.02	Key function selection	Setting range: 0x00–0x27 Ones place: Function of QUICK key on the LED keypad 0: No function 1–5: Reserved 6: Switch command channels in sequence 7: Reserved Tens place: Key lock selection (reserved)	0x06	○
P07.03	Sequence of switching running-command channels by pressing QUICK	Used to set the sequence of switching running-command channels by pressing the key when P07.02=6. Setting range: 0–3 0: Keypad→Terminal→Communication 1: Keypad←→Terminal 2: Keypad←→Communication 3: Terminal←→Communication	1	○
P07.04	Stop function validity of STOP/RST	Specifies the validness range of stop function of the STOP/RST key on the LED keypad. For fault reset, the key is valid in any conditions. Setting range: 0–3 0: Valid for keypad control only	3	○

Function code	Name	Description	Default	Modify
		1: Valid both for keypad and termina control 2: Valid both for keypad and communication control 3: Valid for all control modes		
P07.11	Rectifier bridge temperature	Setting range: -20.0–120.0°C	0.0°C	●
P07.12	Inverter module temperature	Setting range: -20.0–120.0°C	0.0°C	●
P07.13	Control board software version	Setting range: 1.00–655.35	Version depended	●
P07.14	Local accumulative running time	Setting range: 0–65535h	0h	●
P07.21	Factory bar code 1	Setting range: 0x0000–0xFFFF	Model depended	●
P07.22	Factory bar code 2	Setting range: 0x0000–0xFFFF	Model depended	●
P07.23	Factory bar code 3	Setting range: 0x0000–0xFFFF	Model depended	●
P07.24	Factory bar code 4	Setting range: 0x0000–0xFFFF	Model depended	●
P07.25	Factory bar code 5	Setting range: 0x0000–0xFFFF	Model depended	●
P07.26	Factory bar code 6	Setting range: 0x0000–0xFFFF	Model depended	●
P07.27	Present fault type	Setting range: 0–9999 0: No fault 1: Inverter unit U-phase protection (E1) 2: Inverter unit V-phase protection (E2) 3: Inverter unit W-phase protection (E3) 4: Overcurrent during acceleration (E4) 5: Overcurrent during deceleration (E5) 6: Overcurrent during constant speed running (E6) 7: Overvoltage during acceleration (E7) 8: Overvoltage during deceleration (E8)	0	●
P07.28	Last fault type		0	●
P07.29	2nd-last fault type		0	●
P07.30	3rd-last fault type		0	●
P07.31	4th-last fault type		0	●
P07.32	5th-last fault type		0	●

Function code	Name	Description	Default	Modify
		9: Overvoltage during constant speed running (E9) 10: DC bus undervoltage (E10) 11: Motor overload (E11) 12: Inverter overload (E12) 13: Phase loss on input side (E13) 14: Phase loss on output side (E14) 16: Inverter module overheat (E16) 17: External fault (E17) 18: RS485 communication fault (E18) 19: Current detection fault (E19) 20: Motor autotuning fault (E20) 21: EEPROM operation error (E21) 22: PID feedback offline (E22) 23: Braking unit fault (E23) 25: Electronic overload (E25) 26: Keypad communication error (E26) 27: Parameter upload error (E27) 28: Parameter download error (E28) 32: To-ground short-circuit fault (E32) 34: Speed deviation fault (E34) 35: Mal-adjustment fault (E35) 36: Underload fault (E36) 96: No upgrade bootload (E96) 536: Hydraulic probe damage (E536) 576: Lightning strike fault (E576) 9020: Weak-light alarm (A9020) 9021: Dry pumping alarm (A9021) 9022: Full-water alarm (A9022) 9023: Empty-water alarm (A9023) 9024: Mains power not connected alarm (A9024)		
P07.33	Running frequency at present fault	Setting range: 0.00Hz–P00.03	0.00Hz	●
P07.34	Ramp reference frequency at present fault	Setting range: 0.00Hz–P00.03	0.00Hz	●

Function code	Name	Description	Default	Modify
P07.35	Output current at present fault	Setting range: 0–1200V	0V	●
P07.36	Output current at present fault	Setting range: 0.0–3000.0A	0.0A	●
P07.37	Bus voltage at present fault	Setting range: 0.0–2000.0V	0.0V	●
P07.38	Max. temperature at present fault	Setting range: -20.0–120.0°C	0.0°C	●
P07.39	Input terminal state at present fault	Setting range: 0x0000–0xFFFF	0x0000	●
P07.40	Output terminal status at present fault	Setting range: 0x0000–0xFFFF	0x0000	●
P07.41	Running frequency at last fault	Setting range: 0.00Hz–P00.03	0.00Hz	●
P07.42	Ramp reference frequency at last fault	Setting range: 0.00Hz–P00.03	0.00Hz	●
P07.43	Output voltage at last fault	Setting range: 0–1200V	0V	●
P07.44	Output current at last fault	Setting range: 0.0–3000.0A	0.0A	●
P07.45	Bus voltage at last fault	Setting range: 0.0–2000.0V	0.0V	●
P07.46	Temperature at last fault	Setting range: -20.0–120.0°C	0.0°C	●
P07.47	Input terminal status at last fault	Setting range: 0x0000–0xFFFF	0x0000	●
P07.48	Output terminal status at last fault	Setting range: 0x0000–0xFFFF	0x0000	●
P07.49	Running frequency at 2nd-last fault	Setting range: 0.00Hz–P00.03	0.00Hz	●
P07.50	Ramp reference frequency at 2nd-last fault	Setting range: 0.00Hz–P00.03	0.00Hz	●

Function code	Name	Description	Default	Modify
P07.51	Output voltage at 2nd-last fault	Setting range: 0–1200V	0V	●
P07.52	Output current at 2nd-last fault	Setting range: 0.0–6300.0A	0.0A	●
P07.53	Bus voltage at 2nd-last fault	Setting range: 0.0–2000.0V	0.0V	●
P07.54	Temperature at 2nd-last fault	Setting range: -20.0–120.0°C	0.0°C	●
P07.55	Input terminal status at 2nd-last fault	Setting range: 0x0000–0xFFFF	0x0000	●
P07.56	Output terminal status at 2nd-last fault	Setting range: 0x0000–0xFFFF	0x0000	●
P07.57	6th-last fault type	Same as the description for P07.27	0	●
P07.58	7th-last fault type		0	●
P07.59	8th-last fault type		0	●
P07.60	9th-last fault type		0	●
P07.61	10th-last fault type		0	●
P07.62	11th-last fault type		0	●
P07.63	12th-last fault type		0	●
P07.64	13th-last fault type		0	●
P07.65	14th-last fault type		0	●
P07.66	Present pre-alarm type		0	●
P07.67	Last pre-alarm type		0	●
P07.68	2nd-last pre-alarm type		0	●
P07.69	3rd-last pre-alarm type		0	●
P07.70	4th-last pre-alarm type		0	●

Function code	Name	Description	Default	Modify
P07.71	5th-last pre-alarm type		0	●

Group P08—Enhanced functions

Function code	Name	Description	Default	Modify
P08.28	Auto fault reset count	Specifies the number of automatic fault reset times when the inverter uses automatic fault reset. When the number of continuous reset times exceeds the value, the inverter reports a fault and stops. After inverter starts, If no fault occurred within 600s after the inverter starts, the number of automatic fault reset times is cleared. Setting range: 0–65535	5	○
P08.29	Auto fault reset interval	Specifies the time interval from when a fault occurred to when automatic fault reset takes effect. Setting range: 0.1–3600.0s	10.0s	○
P08.40	PWM selection	Setting range: 0x0000–0x1121 Ones place: PWM mode selection 0: PWM mode 1, 3PH modulation and 2PH modulation 1: PWM mode 2, 3PH modulation Tens place: PWM low-speed carrier frequency limit 0: Low-speed carrier frequency limit mode 1 1: Low-speed carrier frequency limit mode 2 2: No limit on low-speed carrier frequency Hundreds place: Deadzone compensation method 0: Compensation method 1 1: Compensation method 2 Thousands place: PWM loading mode	0x0001	◎

Function code	Name	Description	Default	Modify
		selection 0: Interruptive loading 1: Normal loading		

Group P11—Protection parameters

Function code	Name	Description	Default	Modify
P11.00	Protection against phase loss	Setting range: 0x000–0x111 Ones place: 0: Disable software input phase loss protection. 1: Enable software input phase loss protection. Tens place: 0: Output phase loss protection disabled 1: Enable protection against output phase loss. Hundreds place (reserved): 0: Disable hardware input phase loss protection. 1: Enable hardware input phase loss protection.	0x010	○
P11.01	Frequency decrease at sudden power failure	Setting range: 20.0–120.0% 380V: 537V; 220V: 311V The output frequency starts decreasing when the bus is detected to be below the percentage mentioned above.	80.0%	○
P11.02	Frequency drop rate at transient power-off	Setting range: 0.00Hz/s–P00.03/s (max. output frequency) 0.00Hz: Disable the frequency decrease at power failure	10.00Hz/s	○
P11.03	Overvoltage stalling protection	Setting range: 0–1 0: Disable 1: Enable	0	○

Function code	Name	Description	Default	Modify
P11.04	Overvoltage stalling protection voltage	380V: 120–150% (standard bus voltage)	136%	○
		220V: 120–150% (standard bus voltage)	120%	
P11.05	Current limit mode	During accelerated running, as the load is too large, the actual acceleration rate of motor is lower than that of output frequency. To prevent the inverter trip due to overcurrent during acceleration, take the current limit measures. Setting range: 0x00–0x11 Ones place: Current limit action 0: Invalid 1: Always valid Tens place: Hardware current limit overload alarm 0: Valid 1: Invalid	0x01	◎
P11.06	Automatic current limit threshold	Setting range: 50.0–180.0% Percentage of the inverter rated output current.	120.0%	◎
P11.07	Frequency decrease ratio in current limiting	Setting range: 0.00–50.00Hz/s	10.00Hz/s	◎

Group P13—SM control

Function code	Name	Description	Default	Modify
P13.00	SM injected-current decrease ratio	Used to set the reduction rate of the input reactive current. When the active current of the synchronous motor increases to some extent, the input reactive current can be reduced to improve the power factor of the motor. Setting range: 0.0–100% (of the motor rated current)	80.0%	○
P13.01	Detection mode of initial pole	Setting range: 0–2 0: Source current	0	◎

Function code	Name	Description	Default	Modify
		1: High-frequency superposition (reserved) 2: Pulse superimposition (reserved)		
P13.02	Pull-in current 1	Specifies the pole position orientation current. It is valid within the lower limit of pull-in current switch-over frequency threshold. If you need to increase the start torque, increase the value of this function parameter properly. Setting range: -100.0–100% (of the motor rated current)	20.0%	○
P13.03	Pull-in current 2	Used to set the pole position orientation current. It is valid within the upper limit of pull-in current switch-over frequency threshold. You do not need to change the value in most cases. Setting range: -100.0–100% (of the motor rated current)	20.0%	○
P13.04	Switch-over frequency of pull-in current	Setting range: 0.0Hz–P00.03 (Max. output frequency) **Note:** The value is relative to the motor rated frequency.	10.0Hz	○
P13.05	High frequency superimposed frequency	Setting range: 200–1000Hz	500Hz	◎
P13.06	High frequency superimposed voltage	Setting range: 0.0–300% (of the motor rated voltage)	100.0%	◎
P13.07	Control parameter 0	Setting range: 0.0–400.0	0.0	◎
P13.08	Control parameter 1	Setting range: 0–65535	0	○
P13.09	Control parameter 2	Setting range: 0.00–300.00	150.00	○
P13.10	Initial compensation angle of SM	Setting range: 0.0–359.9	0.0	-

Function code	Name	Description	Default	Modify
P13.11	Maladjustment detection time	Used to adjust the responsiveness of anti-maladjustment function. If the load inertia is large, increase the value of this parameter properly, however, the responsiveness may slow down accordingly. Setting range: 0.0–10.0s	0.5s	○
P13.12	High-frequency compensation coefficient of SM	Valid when the motor speed exceeds the rated speed. If oscillation occurred to the motor, adjust this parameter properly. Setting range: 0.0–100.0%	0.0%	○

Group P14—Serial communication

Function code	Name	Description	Default	Modify
P14.00	Local communication address 1	Setting range: 1–247 When the master writes the slave communication address to 0 indicating a broadcast address in a frame, all the salves on the Modbus bus receive the frame but do not respond to it. The communication addresses on the communication network are unique, which is the basis of the point-to-point communication.	1	○
P14.01	Communication baud rate setting 1	Specifies the data transmission speed between the host controller and the inverter. Setting range: 0–6 0: 1200bps 1: 2400 bps 2: 4800 bps 3: 9600 bps 4: 19200 bps 5: 38400 bps 6: 57600 bps	6	○

Function code	Name	Description	Default	Modify
		Note: The baud rate set on the inverter must be consistent with that on the host controller. Otherwise, the communication fails. A greater baud rate indicates faster communication.		
P14.02	Data bit check setting 1	Setting range: 0–5 0: No check (N, 8, 1) for RTU 1: Even check (E, 8, 1) for RTU 2: Odd check (O, 8, 1) for RTU 3: No check (N, 8, 2) for RTU 4: Even check (E, 8, 2) for RTU 5: Odd check (O, 8, 2) for RTU **Note:** The data format set on the inverter must be consistent with that on the host controller. Otherwise, the communication fails.	1	○
P14.03	Communication response delay 1	Setting range: 0–200ms	5ms	○
P14.04	RS485 communication timeout time 1	Setting range: 0.0 (invalid)–60.0s	0.0s	○
P14.05	Transmission error processing 1	Setting range: 0–3 0: Report an alarm and coast to stop 1: Keep running without reporting an alarm 2: Stop in enabled stop mode without reporting an alarm (applicable only to communication mode) 3: Stop in enabled stop mode without reporting an alarm (applicable to any mode)	0	○
P14.06	Modbus communication processing action selection 1	Setting range: 0x00–0x11 Ones place: 0: Respond to write operations 1: Not respond to write operations Tens place: 0: Communication password protection is	0x00	○

Function code	Name	Description	Default	Modify
		invalid. 1: Communication password protection is valid.		
P14.10	Remote upgrade	Setting range: 0–1 0: Disable 1: Enable (baud rate is changed to 57600bps automatically)	0	◎
P14.11	Bootload software version	Setting range: 0.00–9.99	0.00	●
P14.13	Local communication address 2	Setting range: 1–247 When the master writes the slave communication address to 0 indicating a broadcast address in a frame, all the salves on the Modbus bus receive the frame but do not respond to it. The communication addresses on the communication network are unique, which is the basis of the point-to-point communication.	1	○
P14.14	Communication baud rate setting 2	Specifies the data transmission speed between the host controller and the inverter. Setting range: 0–4 0: 1200bps 1: 2400 bps 2: 4800 bps 3: 9600 bps 4: 19200 bps **Note:** The baud rate set on the inverter must be consistent with that on the host controller. Otherwise, the communication fails. A greater baud rate indicates faster communication.	4	●
P14.15	Data bit check setting 2	Setting range: 0–5 0: No check (N, 8, 1) for RTU 1: Even check (E, 8, 1) for RTU 2: Odd check (O, 8, 1) for RTU	1	●

Function code	Name	Description	Default	Modify
		3: No check (N, 8, 2) for RTU 4: Even check (E, 8, 2) for RTU 5: Odd check (O, 8, 2) for RTU **Note:** The data format set on the inverter must be consistent with that on the host controller. Otherwise, the communication fails.		
P14.16	Communication response delay 2	Setting range: 0–200ms	5ms	○
P14.17	RS485 communication timeout time 2	Setting range: 0.0 (invalid)–60.0s	0.0s	○
P14.18	Transmission error processing 2	Setting range: 0–3 0: Report an alarm and coast to stop 1: Keep running without reporting an alarm 2: Stop in enabled stop mode without reporting an alarm (applicable only to communication mode) 3: Stop in enabled stop mode without reporting an alarm (applicable to any mode)	0	○
P14.19	Modbus communication processing action selection 2	Setting range: 0x00–0x11 Ones place: 0: Respond to write operations 1: Not respond to write operations Tens place: 0: Communication password protection is invalid. 1: Communication password protection is valid.	0x00	○

Group P15—Functions special for solar pump

<table>
<tr><th>Function code</th><th>Name</th><th>Description</th><th>Default</th><th>Modify</th></tr>
<tr><td>P15.00</td><td>Solar inverter selection</td><td>Setting range: 0–1
0: Invalid
1: Enable</td><td>1</td><td>◎</td></tr>
<tr><td>P15.01</td><td>Vmp reference voltage source selection</td><td>Setting range: 0–1
0: Set by keypad
1: Set by MPPT</td><td>1</td><td>◎</td></tr>
<tr><td>P15.02</td><td>Keypad set Vmp reference voltage</td><td>When P15.01 is 0, this parameter determines the reference voltage. (During testing, the reference voltage value must be less than the PV input voltage. Otherwise, the system runs at the lower limit of frequency.)
The factory value depends on the model.
<table>
<tr><th>Model</th><th>Default settings</th></tr>
<tr><td>-4</td><td>450.0V</td></tr>
<tr><td>Other</td><td>250.0V</td></tr>
</table>
Setting range: 0.0–6553.5V</td><td>Model depended</td><td>○</td></tr>
<tr><td>P15.03</td><td>PID control deviation limit</td><td>PI adjustment is performed only when the ratio of the difference between the actual voltage and reference voltage to the reference voltage, which is abs (Actual voltage – Reference voltage) * 100.0%/(Reference voltage), exceeds P15.03.
Setting range: 0.0–100.0% (100.0% corresponds to P15.02)</td><td>0.0%</td><td>○</td></tr>
<tr><td>P15.04</td><td>PID output upper limit frequency</td><td>Used to limit the max. value of target frequency. 100.0% corresponds to the max. output frequency (P00.03). After PI adjustment, the target frequency cannot exceed the upper limit.
Setting range: P15.05 –100.0% (100.0% corresponds to P00.03)</td><td>100.0%</td><td>○</td></tr>
<tr><td>P15.05</td><td>PID output lower limit frequency</td><td>Used to limit the min. value of target frequency. 100.0% corresponds to the</td><td>20.0%</td><td>○</td></tr>
</table>

Function code	Name	Description	Default	Modify
		max. output frequency (P00.03). After PI adjustment, the target frequency cannot be less than the lower limit. Setting range: 0.0% –P15.04 (100.0% corresponds to P00.03)		
P15.06	KP1	Proportional coefficient 1 of target frequency. A greater value indicates stronger effect and faster adjustment. Setting range: 0.00–100.00	4.00	○
P15.07	KI1	Integral coefficient 1 of target frequency. A greater value indicates stronger effect and faster adjustment. Setting range: 0.00–100.00	4.00	○
P15.08	KP2	Proportional coefficient 2 of target frequency. A greater value indicates stronger effect and faster adjustment. Setting range: 0.00–100.00	35.00	○
P15.09	KI2	Integral coefficient 2 of target frequency. A greater value indicates stronger effect and faster adjustment. Setting range: 0.00–100.00	35.00	○
P15.10	PI switchover point	When the absolute value of PV voltage minus reference voltage is greater than P15.10, P15.08 and P15.09 are used. Otherwise, P15.06 and P15.07 are used. Setting range: 0.0–6553.5V	20.0V	○
P15.11	Water level control selection	Setting range: 0–1 0: Control through digital input 1: Control through AI1 input	0	◎
P15.12	Full-water level threshold	Setting range: 0.0%–P15.13	25.0%	○
P15.13	Empty-water level threshold	Setting range: P15.12–100.0%	75.0%	○
P15.14	Full-water level delay	Time setting on full-water level delay. (This parameter is still valid for digital full-water signal.) Setting range: 0–10000s	5s	○

Function code	Name	Description	Default	Modify
P15.15	Full-water level wake-up delay	Time setting on full-water level wake-up delay. This parameter is still valid for digital full-water signal. Setting range: 0–10000s	20s	○
P15.16	Empty-water level delay	Time setting on empty-water level delay. This parameter is still valid for digital empty-water signal. Setting range: 0–10000s	5s	○
P15.17	Empty-water level wake-up delay	Time setting on empty-water level wake-up delay. This parameter is still valid for digital empty-water signal. Setting range: 0–10000s	20s	○
P15.18	Hydraulic probe damage point	0.0% indicates the function is invalid. If the setting is not 0.0%, when the detected water level control analog signal is greater than the setting, the system directly reports the fault (E536) and stop. Setting range: 0.0–100.0%	0.0%	○
P15.19	Dry pumping detection time	When the dry pumping prevention detection value (based on the percentage of P15.22) is less than P15.20 and lasts for P15.19, a dry pumping alarm (A9021) is reported. Setting range: 0.0–1000.0s	60.0s	○
P15.20	Dry pumping threshold	Setting range: 0.0–100.0%	0.0%	○
P15.21	Dry pumping reset delay	In case of the dry pumping alarm, after the time specified in P15.21, the machine will reset automatically. Setting range: 0.0–6000.0s	660.0s	○
P15.22	Dry-pumping prevention selection	Setting range: 0–1 0: Determined based on output power 1: Determined based on output current	0	○
P15.23	Weak-light delay	When the output frequency is less than or equal to the PI output frequency lower limit and the delay counting is started, which reaches the weak-light delay time,	100.0s	○

Function code	Name	Description	Default	Modify
		the system reports the weak-light alarm (A-LS) and then sleeps. In the non-continuous situation, the delay counter is automatically cleared. Setting range: 0.0–3600.0s **Note:** ● When the bus voltage is lower than the undervoltage point or the PV voltage is lower than 70V, the system directly reports the weak-light alarm without any delay. ● When P15.32=0, in weak-light condition, the system automatically switch to the power-frequency input mode.		
P15.24	Weak-light wake-up delay	If the PV voltage is greater than the PV startup voltage (P19.08) under weak-light alarm, the system clears the alarm with the weak-light wake-up delay and then re-enters the running state. When P15.32=0, if the PV voltage is greater than P15.34, the system switches from the power-frequency input mode to the PV input mode with the weak-light wake-up delay. Setting range: 0.0–3600.0s	300.0s	○
P15.25	Display of initial Vmp reference voltage	Setting range: 0.0–2000.0V	0.0V	●
P15.26	Min. factor value of Vmp reference voltage	Used to set the min. reference voltage in max. power tracking. Min. reference voltage in max. power tracking = (Solar panel open-circuit voltage) * P15.26 Solar panel open-circuit voltage = P15.25/P15.28 Track the max. power in the range of Min. reference voltage in max. power	0.50	○

<table>
<tr><th>Function code</th><th>Name</th><th>Description</th><th>Default</th><th>Modify</th></tr>
<tr><td></td><td></td><td>tracking–P15.27. P15.27 must be greater than the min. reference voltage. A smaller difference between them indicates a smaller range, which means faster tracking. The voltage corresponding to the max. power must be within the range. P15.26 and P15.27 must be adjusted according to the site situation.
Setting range: 0.00–1.00</td><td></td><td></td></tr>
<tr><td>P15.27</td><td>Max. value of Vmp reference voltage</td><td>It is the max. voltage tracked when MPPT max. power tracking is valid.
The factory value depends on the model.
<table>
<tr><th>Model</th><th>Default settings</th></tr>
<tr><td>-4</td><td>750.0V</td></tr>
<tr><td>Other</td><td>400.0V</td></tr>
</table>
Setting range: P15.26–P15.31</td><td>Model depended</td><td>◎</td></tr>
<tr><td>P15.28</td><td>Adjustment of initial Vmp reference voltage</td><td>Initial reference voltage=Voc*P15.28
Setting range: 80–95%</td><td>88%</td><td>◎</td></tr>
<tr><td>P15.29</td><td>Auto adjustment interval of Vmp upper/lower limit</td><td>0.0 indicates the function is invalid. If the setting is not 0.0, the upper and lower limits of Vmp are automatically adjusted at every interval set in P15.29. The center after the adjustment is the actual PV voltage, and the upper/lower limit adjustment range is P15.30. That is: Max./Min. reference voltage = Actual PV voltage ± P15.30. This will be automatically updated to P15.26 and P15.27.
Setting range: 0.0–10.0s</td><td>0.0s</td><td>◎</td></tr>
<tr><td>P15.30</td><td>Auto adjustment range of Vmp upper/lower limit</td><td>Range in which Vmp upper/lower limit can be automatically adjusted.
Setting range: 1.0–100.0V</td><td>30.0V</td><td>○</td></tr>
<tr><td>P15.31</td><td>Vmp max. value</td><td>During the max. power tracking, the solar panel reference voltage upper limit will not exceed the value of P15.31.</td><td>Model depended</td><td>○</td></tr>
</table>

<table>
<tr><th>Function code</th><th>Name</th><th>Description</th><th>Default</th><th>Modify</th></tr>
<tr><td></td><td></td><td>The factory value depends on the model.
<table><tr><th>Model</th><th>Default settings</th></tr><tr><td>-4</td><td>750.0V</td></tr><tr><td>Other</td><td>400.0V</td></tr></table>Setting range: P15.27–6553.5V</td><td></td><td></td></tr>
<tr><td>P15.32</td><td>Selection between PV input and power frequency input</td><td>If P15.32 is set to 0, the system switches between PV input and power frequency input according to the detected PV voltage and switching threshold.
If P15.32 is set to 1, the system switches to power frequency input when it detects successful AC power connection; otherwise, it switches to PV input.
If P15.32 is set to 2, the system forcibly switches to PV input.
Setting range: 0–2
0: Automatic mode
1: Hybrid power supply mode
2: PV input mode
Note: This parameter is invalid when terminal input function 42 is valid.</td><td>2</td><td>◎</td></tr>
<tr><td>P15.33</td><td>Threshold setting for switching to power frequency input</td><td>When the PV voltage is lower than the threshold or in case of weak light, you can switch to power frequency input through the relay output.
Setting range: 0.0V–P15.34 (0.0: invalid)
Note: The startup voltage of the boost module is 80V, and the minimum working voltage is 70V.
For models without the boost module, the switching voltage point is set by the external voltage detection circuit. For models with the boost module, the switching voltage point is 70V.</td><td>70.0V</td><td>○</td></tr>
<tr><td>P15.34</td><td>Threshold setting for switching to PV input</td><td>When the PV voltage is higher than the threshold, the system switches to the PV input through the relay output after the weak-light wake-up delay.</td><td>100.0V</td><td>○</td></tr>
</table>

<table>
<tr><th>Function code</th><th>Name</th><th>Description</th><th>Default</th><th>Modify</th></tr>
<tr><td></td><td></td><td>To avoid switching back and forth, this threshold should be slightly higher than P15.33.
For models without the boost module, the switching voltage point is set by the external voltage detection circuit. For models with the boost module, the switching voltage is 100.0V.
Setting range: P15.33–400.0V (0.0: invalid)</td><td></td><td></td></tr>
<tr><td>P15.35</td><td>Rated pump flow</td><td>The pump flow is Q_N when the pump runs at the rated frequency and lift.
Setting range: 0.0–1000.0m^3/ h</td><td>0.0m^3/h</td><td>○</td></tr>
<tr><td>P15.36</td><td>Rated pump lift</td><td>The pump lift is H_N when the pump runs at the rated frequency and flow.
Setting range: 0.0–1000.0m</td><td>0.0m</td><td>○</td></tr>
<tr><td>P15.37</td><td>PV undervoltage point</td><td>When the PV voltage is less than the value of this parameter, the system reports the PV undervoltage fault. The factory value depends on the model.
<table>
<tr><th>Model</th><th>Default settings</th></tr>
<tr><td>-4</td><td>340.0V</td></tr>
<tr><td>Other</td><td>140.0V</td></tr>
<tr><td>Models with boost</td><td>70.0V</td></tr>
</table>
Setting range: 0.0–400.0V</td><td>Model depended</td><td>○</td></tr>
<tr><td>P15.39</td><td>Product model</td><td>The function code enables users to change the product model. For example, if you want to use the -4 model as the -2 model, set P15.39 to 2.
Setting range: 0–P29.01
0: -SS2/-DS2, 220V single-phase input, single-phase output
1: -S2, 220V single-phase input, three-phase output
2: -2/-D2, 220V three-phase input, three-phase output
3: -4/-D4, 380V three-phase input, three-phase output</td><td>Model depended</td><td>◎</td></tr>
</table>

<table>
<tr><th>Function code</th><th>Name</th><th>Description</th><th>Default</th><th>Modify</th></tr>
<tr><td></td><td></td><td>The factory value depends on the model.
<table>
<tr><th>Model</th><th>Default settings</th></tr>
<tr><td>-4/-D4</td><td>3</td></tr>
<tr><td>-2/-D2</td><td>2</td></tr>
<tr><td>-S2</td><td>1</td></tr>
<tr><td>-SS2/-DS2</td><td>0</td></tr>
</table></td><td></td><td></td></tr>
<tr><td>P15.40</td><td>Enable PQ curve fitting</td><td>When P15.40=1, the flow calculation uses the point between P15.41 and P15.50 for PQ curve fitting calculation, which is more accurate.
Setting range: 0–1
0: Invalid
1: Enable</td><td>0</td><td>◎</td></tr>
<tr><td>P15.41</td><td>PQ curve power point 1</td><td>Corresponding power point when the input power of water pump is at the first point of PQ curve.
Setting range: 0.0–1000.0kW</td><td>0.0kW</td><td>◎</td></tr>
<tr><td>P15.42</td><td>PQ curve power point 2</td><td>Corresponding power point when the input power of water pump is at the second point of PQ curve.
Setting range: 0.0–1000.0kW</td><td>0.0kW</td><td>◎</td></tr>
<tr><td>P15.43</td><td>PQ curve power point 3</td><td>Corresponding power point when the input power of water pump is at the third point of PQ curve.
Setting range: 0.0–1000.0kW</td><td>0.0kW</td><td>◎</td></tr>
<tr><td>P15.44</td><td>PQ curve power point 4</td><td>Corresponding power point when the input power of water pump is at the fourth point of PQ curve.
Setting range: 0.0–1000.0kW</td><td>0.0kW</td><td>◎</td></tr>
<tr><td>P15.45</td><td>PQ curve power point 5</td><td>Corresponding power point when the input power of water pump is at the fifth point of PQ curve.
Setting range: 0.0–1000.0kW</td><td>0.0kW</td><td>◎</td></tr>
<tr><td>P15.46</td><td>PQ curve flow point 1</td><td>Corresponding flow point when the flow of water pump is at the first point of PQ curve.
Setting range: 0.0–1000.0m^3/ h</td><td>0.0m^3/h</td><td>◎</td></tr>
</table>

Function code	Name	Description	Default	Modify
P15.47	PQ curve flow point 2	Corresponding flow point when the flow of water pump is at the second point of PQ curve. Setting range: 0.0–1000.0m^3/ h	0.0m^3/h	◎
P15.48	PQ curve flow point 3	Corresponding flow point when the flow of water pump is at the third point of PQ curve. Setting range: 0.0–1000.0m^3/ h	0.0m^3/h	◎
P15.49	PQ curve flow point 4	Corresponding flow point when the flow of water pump is at the fourth point of PQ curve. Setting range: 0.0–1000.0m^3/ h	0.0m^3/h	◎
P15.50	PQ curve flow point 5	Corresponding flow point when the flow of water pump is at the fifth point of PQ curve. Setting range: 0.0–1000.0m^3/ h	0.0m^3/h	◎
P15.51	Water pump efficiency	Setting range: 0–100% (overall efficiency of water pump)	80%	○
P15.52	Local time	0.00–23.59	0.00	○
P15.53	Timing startup time	0.00–P15.54	0.00	○
P15.54	Timing stop time	P15.53–23.59	0.00	○

Group P16—Solar pump commissioning functions

Function code	Name	Description	Default	Modify
P16.00	MPPT power source	Setting range: 0–2 0: Output power 1: Input power 2: Reserved	1	○
P16.01	Bus voltage filter coefficient	Setting range: 0–15	5	○
P16.04	MPPT regulation step	When it is set to 0, the step value is automatically set, calculated from "average voltage/100", range [2.0V, 5.0V]. When this value is not 0, the step value is	0.0V	○

Function code	Name	Description	Default	Modify
		the value. Setting range: 0.0–10.0V		
P16.05	MPPT regulation time	Setting range: 0.0–120.0s	2.0s	○
P16.06	△P1 coefficient	The value affects the effect of tracking from right to left, with larger values being closer to right Setting range: 0.0–5.0%	0.3%	○
P16.07	△P2 coefficient	The value affects the effect of tracking from left to right, with larger values being closer to right Setting range: 0.0–5.0%	0.3%	○
P16.09	Fine-tuned reference voltage time	When using KP2/KI2 continuously exceeds this value, the reference voltage slightly increases 1V. Setting range: 0.00–60.00s	0.01s	○

Group P17—Status viewing

Function code	Name	Description	Default	Modify
P17.00	Set frequency	Displays the present set frequency of the inverter. Setting range: 0.00Hz–P00.03	0.00Hz	●
P17.01	Output frequency	Displays the present output frequency of the inverter. Setting range: 0.00Hz–P00.03	0.00Hz	●
P17.02	Ramp reference frequency	Displays the present ramp reference frequency of the inverter. Setting range: 0.00Hz–P00.03	0.00Hz	●
P17.03	Output voltage	Displays the present output voltage of the inverter. Setting range: 0–1200V	0V	●
P17.04	Output current	Displays the valid value of present output current of the inverter. Setting range: 0.0–3000.0A	0.0A	●

Function code	Name	Description	Default	Modify
P17.05	Motor rotation speed	Displays the present motor rotation speed. Setting range: 0–65535rpm	0rpm	●
P17.06	Torque current	Displays the present torque current of the inverter. Setting range: -3000.0–3000.0A	0.0A	●
P17.07	Exciting current	Displays the present exciting current of the inverter. Setting range: -3000.0–3000.0A	0.0A	●
P17.08	Motor power	The function code is used to displays the present motor power. 100% corresponds to the motor rated power. Setting range: -300.0–300.0%	0.0%	●
P17.09	Motor output torque	The function code is used to displays the present output torque of the inverter; 100% relative to the rated motor torque. Setting range: -250.0–250.0%	0.0%	●
P17.10	Estimated motor frequency	The function code is used to display the estimated motor rotor frequency under the open-loop vector condition. Setting range: 0.00Hz–P00.03	0.00Hz	●
P17.11	DC bus voltage	Displays the present DC bus voltage of the inverter. Setting range: 0.0–2000.0V	0.0V	●
P17.12	Digital input terminal status	Displays the present digital input terminal state of the inverter. Setting range: 0x000–0x0FF Bit0–bit1: reserved; bit2: RO1 terminal; bit3: reserved	0x0000	●
P17.13	Digital output terminal status	Displays the present digital output terminal state of the inverter. Setting range: 0x0–0xF (corresponding to RO2/RO1/HDO/Y1)	0x0	●
P17.19	AI1 input voltage	0.00–10.00V	0.00V	●
P17.38	Current of main winding	The function code is used to display the single-phase motor main winding current (when the single-phase motor is	0.00A	●

Function code	Name	Description	Default	Modify
		controlled by removing capacitors). Setting range: 0.00–100.00A		
P17.39	Current of secondary winding	The function code is used to display the single-phase motor secondary winding current (when the single-phase motor is controlled by removing capacitors). Setting range: 0.00–100.00A	0.00A	●

Group P18—Status viewing functions special for solar pump

Function code	Name	Description	Default	Modify
P18.00	Vmp reference voltage	MPPT is performed at the inverter side. The value is given by the inverter side. Setting range: 0.0–6553.5V	0.0V	●
P18.01	Actual PV voltage	Setting range: 0.0–6553.5V	0.0V	●
P18.02	Vmp lower limit	Setting range: 0.0–6553.5V	0.0V	●
P18.03	Bus current	Setting range: 0.00–655.35A	0.00A	●
P18.04	PV current	Setting range: 0.00–655.35A	0.00A	●
P18.05	Boost duty ratio	Setting range: 0–100%	0%	●
P18.06	Single-phase pump output current	Setting range: 0.00–655.35A	0.00A	●
P18.07	PV input power	Setting range: 0.00–655.35kW	0.00kW	●
P18.08	Output power	Setting range: 0.00–655.35kW	0.00kW	●
P18.09	AC input power	Setting range: 0.00–655.35kW	0.00kW	●
P18.10	Device power supply display	Setting range: 0x00–0x11 Ones place 0: Solar power supply 1: AC grid power supply Tens place 0: System with boost module detected 1: System without boost module detected	0x00	●
P18.11	Actual pump flow	$Q=Q_N*f/f_N$ (Unit: m^3/h)	0.0m^3/h	●
P18.12	Actual pump lift	$H=0.9H_N*(f/f_N)^2$ (Unit: m)	0.0m	●
P18.13	High-order bits in total pump flow	Used to display the 16 high-order bits of the total pump flow.	0m^3	●

Function code	Name	Description	Default	Modify
P18.14	Low-order bits in total pump flow	Used to display the 16 low-order bits of the total pump flow. Total pump flow = P18.13*65535 + P18.14	0.0m^3	●
P18.15	Reset total pump flow	When it is set to 1, the duration of this run can be reset. P18.13 and P18.14 are cleared and then accumulated again. After the resetting succeeds, P18.15 is automatically changed to 0. Setting range: 0–1	0	◎
P18.17	High-order bits in total pump DC electricity consumption	Setting range: 0–65535kWh	0kWh	●
P18.18	Low-order bits in total pump DC electricity consumption	Setting range: 0.0–6553.5kWh	0.0kWh	●
P18.19	Reset total pump DC electricity consumption	Setting range: 0–1	0	◎
P18.21	High-order bits in total pump running duration	Setting range: 0–65535min	0min	●
P18.22	Low-order bits in total pump running duration	Setting range: 0.0–6553.5min	0.0min	●
P18.23	Reset total pump running duration	Setting range: 0–1	0	◎

Group P19—Boost dedicated group

Function code	Name	Description	Default	Modify
P19.00	Boost voltage loop KP	0.000–65.535	0.500	○
P19.01	Boost voltage loop KI	0.000–65.535	0.080	○

Function code	Name	Description	Default	Modify
P19.02	Boost current loop KP	0.000–65.535	0.010	○
P19.03	Boost current loop KI	0.000–65.535	0.010	○
P19.04	Boost voltage loop upper limit	P19.05–25.0A	Model depended	○
P19.05	Boost voltage loop lower limit	0.0A–P19.04	0.0A	○
P19.06	Bus reference voltage	300.0–650.0V	Model depended	◎
P19.08	Boost startup voltage	60.0–200.0V	80.0V	◎
P19.10	Boost version number	0.00–9.99	0.00	●

Your Trusted Industry Automation Solution Provider

Shenzhen INVT Electric Co., Ltd.
Address: INVT Guangming Technology Building, Songbai Road, Matian,
Guangming District, Shenzhen, China

INVT Power Electronics (Suzhou) Co., Ltd.
Address: No. 1 Kunlunshan Road, Science & Technology Town,
Suzhou New District, Jiangsu, China

Website: www.invt.com

INVT mobile website

INVT e-manual

66001-01302

Manual information may be subject to change without prior notice.

202511 (V1.2)